White Paper on Standards for DER Communications Using IEC 61850

Contents

Figures

INTRODUCTION

1 Introduction to Distributed Energy Resources (DER) Object Modelling (Informative)

1.1 Challenge of Integrating DER into the Power System Information Infrastructure

The advent of decentralized electric power production is a reality in the majority of the power systems all over the world, driven by the need for new types of energy converters to replace the heavy reliance on oil, by the increased demand for electrical energy, by the development of new technologies of small power production, by the deregulation of the energy market, and by the increasing environmental constraints. These pressures have greatly increased the demand for Distributed Energy Resources (DER) systems which are interconnected with the distribution power systems.

Distribution power systems are and will continue to be the most impacted by DER, but transmission and the management of generation operations are also impacted. A number of studies on the wide-spread interconnection of DER systems have shown significant effects and impacts on operation of the entire electrical system.

As a result not only of DER systems, but also the need for greater efficiency and reliability of the power system, automation of the distribution systems is becoming a major requirement. This distribution automation implies new remote control functions, modified distribution configurations, increasingly intelligent protection systems, and the use of significantly more telecommunication and information technologies.

The rapid advances of digital technologies have enabled the automation of electric power operations, providing utilities and customers with both new capabilities and new challenges. The challenge facing utilities, customers, vendors, and the electricity marketplace is: how can the information infrastructure be implemented to meet the expanded needs of the power system, while not becoming part of the problem itself.

Part of that challenge can be met by IEC 61850 object models for DER, as the standardized communications interface for DER devices. Standardized communication interfaces permit the interoperability between different systems from different vendors, thus increasing the cost benefit to all owners, operators, and users of DER systems.

DER systems involve more than just turning a DER unit on and off. DER systems involve the following aspects:

- Management of the interconnection between the DER units and the power systems they connect to, including local power systems, switches and circuit breakers, and protection.
- Monitoring and controlling the DER units as producers of electrical energy
- Monitoring and controlling the individual generators, excitation systems, and inverters/converters
- Monitoring and controlling the energy conversion systems, such as reciprocating engines (e.g. diesel engines), fuel cells, photovoltaic systems, and combined heat and power systems
- Monitoring and controlling the auxiliary systems, such as interval meters, fuel systems, and batteries
- Monitoring the physical characteristics of equipment, such as temperature, pressure, heat, vibration, flow, emissions, and meteorological information

The information requirements for DER systems are illustrated in Annex Figure 1 below. These IEC 61850 DER object models cover all operational aspects of DER systems, but do not address market operations.

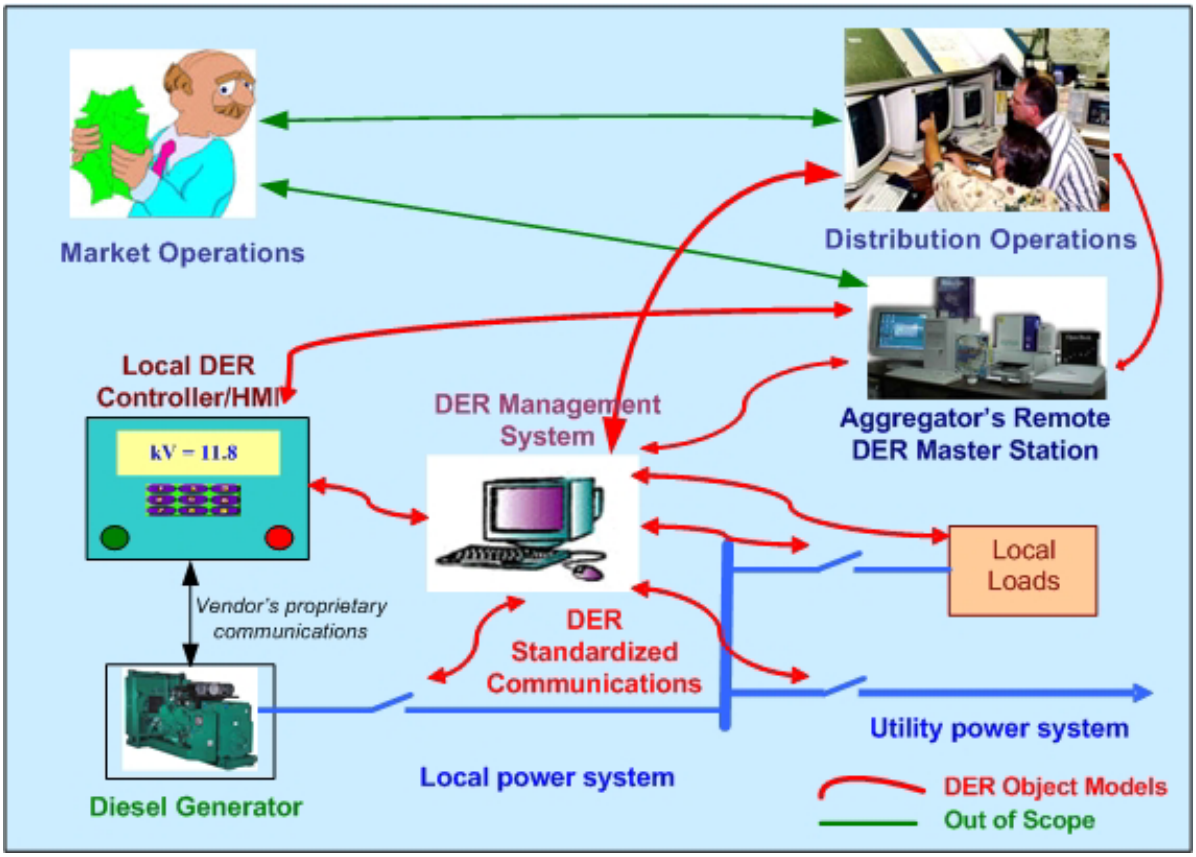

Annex Figure 1: Interactions involving Distributed Energy Resources (DER) in Electric Power System Operations

1.2 Background on the Development of the DER Object Models

IEC TC-57, WG-17 is developing the communication architecture for integrating DER into the IEC 61850 body of communication standards. This document, the first standard to be produced by WG-17, provides standards for object models for exchanging information with DER devices. DER devices are generation and energy storage systems that are connected to a power distribution system. Object models for four specific types of DER are provided in this first document:

1. Photovoltaic systems
2. Reciprocating engines
3. Fuel cells
4. Combined heat and power

Additional standards documents will be developed by this working group in the future.

The approach taken by the working group in developing these models was to seek wide applicability of the models. Accordingly, no assumption was made as to DER ownership.

Ownership could reside with a utility or an alternative party. No limitations were placed on type of distribution system (networked or radial) or on where in the distribution system the DER might be located. The requisite distribution design engineering for DER installations must address the distribution system electrical issues and determine where DER can safely be placed in the distribution system and what alterations to the electrical system may be needed. This document focuses specifically on the ability to communicate with the DER and dispatch the services it may be intended to provide for the distribution system operator, such as emergency power and voltage support.

The object models provide the structured, standard identification and naming of the attributes that need to be included in the information exchange with the DER. These object models will become a part of the IEC 61850 body of communication standards for electric power systems. The goal is to achieve interoperability of DER with the power system, including current components and new technologies that are coming in the future. Interoperability of all intelligent electronic devices (IEDs) in the system is desired, and DER is one such IED type. IEC 61850 is the principal body of international communication architecture standards evolving to support real-time automated operation of the power system of the future. As such, it is intended that the DER object models be a part of this communication architecture and not be used as a standalone entity. In other words, if a power system operator specifies that DER should conform to the 61850 family of standards, it is because they are intending to migrate their whole automated system to 61850 conformity.

1.3 Purpose of this Annex on DER Object Models (DER-OM)

Utilities will need to manage increasing amounts of DER within their distribution systems, and will increasingly use automation to handle the challenges and opportunities posed by DER. The purpose of this annex is to discuss the scope and requirements for DER object models for the exchange of information between DER devices and any systems which monitor, control, maintain, audit, and generally operate the DER devices. This annex explains what object models are and provides guidelines on which objects are associated with specific DER devices and configurations.

Simply put, “object models” are standardized formats or templates for exchanging data between different equipment or systems. Standard object models, combined with standard service models (methods for sending the data) and standard protocols (the bits and bytes actually send over the communication channel), permit different systems to interact with minimal customization. The combination of object model, service model, and protocol profiles can be termed the “information model”.

These DER object models are based on open-system language, semantics, services, protocols, and architecture which have been standardized by IEC 61850. These DER object models re-use components of existing IEC 61850 object models where possible, but also include some extensions to IEC 61850.

1.4 Purpose of DER-OM

Utilities will need to manage increasing amounts of DER within their distribution systems, and will increasingly use automation to handle the challenges and opportunities posed by DER. The purpose of this annex is to discuss the scope and requirements for DER object models for the exchange of information between DER devices and any systems which monitor, control, maintain, audit, and generally operate the DER devices. This annex explains what object models are and provides guidelines on which objects are associated with specific DER devices and configurations.

Simply put, “object models” are standardized formats or templates for exchanging data between different equipment or systems. Standard object models, combined with standard service models (methods for sending the data) and standard protocols (the bits and bytes actually send over the communication channel), permit different systems to interact with minimal customization. The

combination of object model, service model, and protocol profiles can be termed the “information model”.

These DER object models are based on open-system language, semantics, services, protocols, and architecture which have been standardized by IEC 61850. These DER object models re-use components of existing IEC 61850 object models where possible, but also include some extensions to IEC 61850. An illustration of the relationships of the IEC 61850 object models is shown in Annex Figure 2.

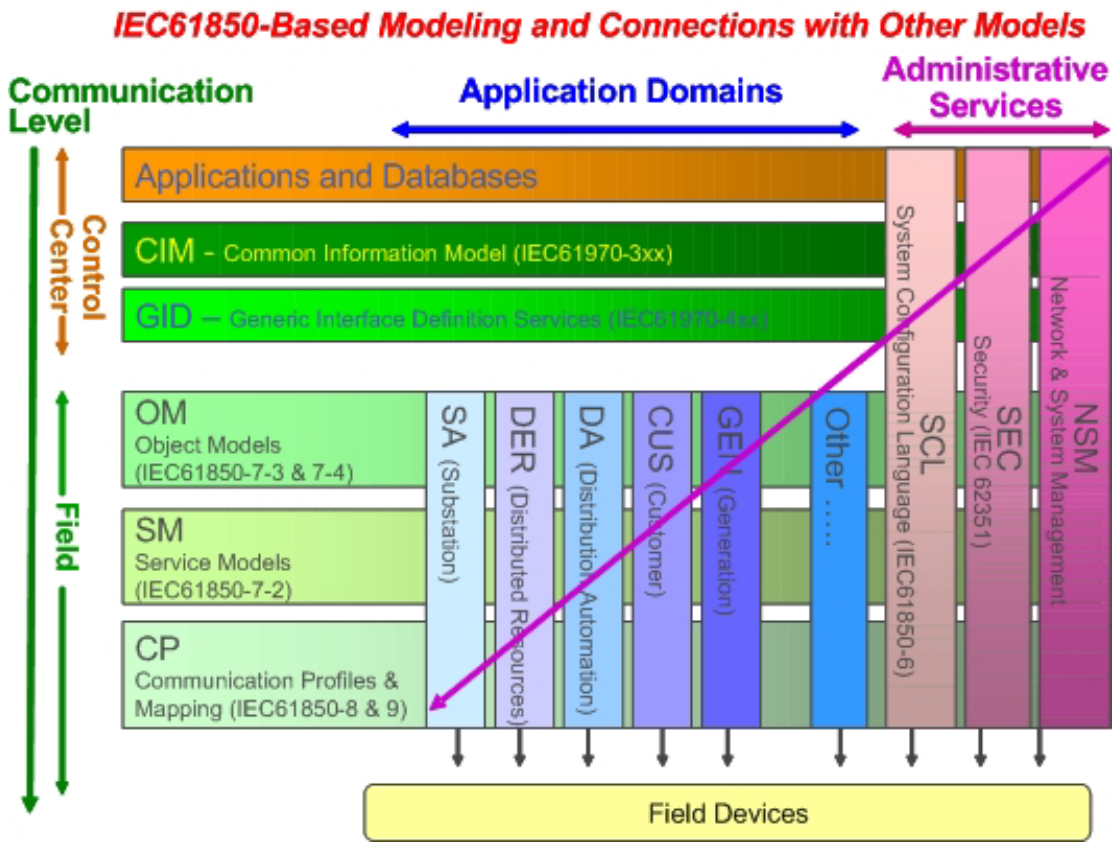

Annex Figure 2: Overview of IEC Object Modeling Constructs

2 Functional Requirements for DER Information (Informative)

2.1 Overview of the DER Environment

2.1.1 Challenges and Opportunities of Integrating DER with Utility Operations

Spurred by the need to increase renewable sources of energy, to decrease the costs of energy usage, and to take advantage of the electricity market, the number and type of Distributed Energy Resources (DER) systems interconnected to power systems has sharply increased worldwide. Some of these DER systems are owned and directly managed by utilities; most, however, are owned by utility customers and often operated by independent energy service providers. This diversity of ownership and operations provides even more challenges to utilities as they try to manage their power system operations efficiently and reliably.

Many utilities, DER owners, and regulators are examining new technologies and exploring new methods for safely, reliably, and effectively implementing and interconnecting DER systems. At the same time, utilities are trying to find ways to cut operational costs without jeopardizing the security of the power system. As a result of this pressure from both sides, the possible benefits of different DER technologies are increasingly being evaluated, and the operational requirements for interconnecting these DER systems are being assessed. Some benefits could be “soft”, such as increased customer satisfaction, while other benefits could be “hard” or quantifiable monetary benefits which either reduce costs or increase revenue.

DER systems can have very different operational characteristics. For instance, some types are strictly driven by their energy source, such as wind and solar energy. Others can be more directly controlled, but may have constraints such as emission limits or availability limits. Many need to balance the production of electrical energy with other requirements, such as heating buildings for CHP units or river water flows for hydro units. In other cases, the variability of some energy sources needs to be balanced by alternate energy sources. For instance, in a wind farm, part of the inconstant wind power electrical energy can be used to charge batteries or pump water into storage basins. These alternate energy sources can then augment the power produced by the wind farm whenever the wind decreases.

Some of the DER uses include:

1. **Generation capacity**. DER devices have generation capacity that can provide energy to offset load within a customer site, to support local load on a distribution feeder, and/or to provide energy within a substation. Using net metering or other types of tariffs, DER owners can be paid for this generation.
2. **Load following**. DER devices can be used to follow load, not necessarily second by second (as needed by automatic generation control), but over short time frames or to counteract the large non-conforming loads of the DER owner. Utilities could benefit from improved power quality (e.g. more stable voltages, lower voltage spikes) on the feeder serving this load.
3. **Power supply balancing**. For DER units whose energy source can be variable, such as wind farms and solar systems, other DER units, such as batteries and pumped storage, can be used to fill valleys and maintain a more constant power supply.
4. **Peak shaving**. DER systems can be scheduled, manually controlled, or remotely controlled to turn on or provide more power during peak load times. Some DER systems naturally provide additional energy during peak load times, such as photovoltaic systems increasing output on hot sunny days when the air conditioning load increases.
5. **Operating reserve**. DER systems which are on-line or have a short start-up and synchronization time can be counted as “spinning” or operating reserve. Since DER units are normally smaller than units in primary generating plants, this operating reserve would

come in small increments and could be scheduled by utilities to avoid starting up much larger units.

6. **Emergency backup generation**. The same DER devices which could provide operating reserve can also provide emergency power to individual customer sites, substations, and groups of customers.
7. **Voltage support**. Feeders drop in voltage from the source substation to the end of the feeder. Typically voltage regulators along the feeders are installed to boost voltage and prevent low voltage conditions for customers at the end. DER devices could provide the same voltage support. If many DER devices are located along a feeder, voltage support could be achieved with more but smaller increments, thus permitting the feeder voltage at the distribution substation to have a wider range for the load tap changer. This wider range could be translated into lower feeder voltage at the substation during peak loads, and vice versa during low loads.
8. **Var support**. Some DER devices could provide var support in place of capacitor banks with similar benefits as for voltage support.
9. **Intentional islanding**. Sections of distribution feeders with significant amounts of available DER energy could be designed to become self-supporting islands if outages shut off the primary source of electricity. Campuses, isolated developments, or groups of hotels might be candidates.
10. **Pollution credits**. Many DER devices, particularly the renewables (wind, solar, etc.), cause less pollution than the larger coal and oil plants. Utilities which want or need to minimize their pollution levels could purchase more power from these DER devices, while customers concerned with pollution could either purchase or contract to use these DER devices.
11. **Green power**. Either through mandated use of renewable energy or via the electricity marketplace, the need for "Green Power" is growing. Many customers are willing to pay extra for green power. Although most green power today comes from hydro power, DER based on renewables could provide additional support, particularly whenever access to the hydro power (usually far away from most loads) is unavailable or curtailed due to power system problems.
12. **Defer construction of utility facilities**. DER devices which act as negative load, provide peak shaving, and support voltage and vars on the feeder, also implicitly can defer the construction or upgrade of utility facilities. Deferral of these large capital expenditures can significantly off-set the lower costs associated with installing, interconnecting, and operating smaller DER equipment.
13. **DER products for sale**. Utilities could provide DER devices for sale, using utility expertise and equipment for consulting on different DER alternatives, for installing the DER devices, and for testing the monitoring and control facilities.
14. **DER services**. Utilities could provide operation and maintenance services for DER equipment, again using their expertise and facilities as a marketing advantage.

2.1.2 DER Monitoring and Control Requirements

Installing DER devices presents DER owners and utilities with multiple challenges. The main challenge is the interconnection of the DER system to distribution systems that were not designed for two-way real and reactive power flows. This technical challenge has been complicated by the organizational challenges of the deregulation process in the utility industry. For instance, which utility and non-utility organizations will be permitted to own and operate generation and energy storage devices at the distribution level? Which organizations and/or customers can benefit from DER? How will costs and benefits be allocated to participating organizations and customers?

Whichever organizations do become involved with implementing DER devices, the key for utilities and other organizations to utilize DER effectively will be the timely and efficient exchange of critical and relevant information. For instance, some information may be collected once a month, such as meter reads of DER usage, and maybe perfectly adequate. However, other information, such as the on-off state of a DER device, or its remaining energy generation capacity, or its availability to provide backup power, must be known in "real-time" (seconds) for it to be truly useful. Without the ability to remotely monitor and control the DER devices in real-time, utilities will be blind and inefficient in using these DER resources.

In order to determine what types of communications, control, and management technologies are needed for DER, it is first necessary to determine the information and timing requirements of all of the stakeholders involved with DER. Once the stakeholder requirements are determined, then the flow of information can be assessed. With the information flows understood, then the technology requirements can be addressed.

2.1.3 DER Stakeholders

DER Stakeholders are the roles that different people or companies play in relation to each other with respect to the DER systems, both from a power system operational point of view and in the deregulated electricity marketplace. These roles determine what information they have and what information they need. In some cases, the same person or company may actually play two different roles at one time, but conceptually that one person or company is still two different stakeholders.

The stakeholders in the use of DER devices (see Annex Figure 3) consist of the following:

1. **DER Owners:** The DER Owners own the DER systems. These owners could be viewed as a small ***GenCo***: the owners profit from using the DER either for serving their own load or from selling products: energy capacity or ancillary services. These services could be operating reserve, peak shaving, emergency backup, voltage support, var support, etc.
2. **Marketers or Energy Services Providers:** The Marketers wish to purchase energy or other services from the DER device for servicing their customer loads. In the terms of deregulation, they can be viewed as an **Energy Service Provider (ESP)**, if they are providing more services than just energy. They negotiate with the DER Owner for the type of product (e.g. capacity, operating reserve, and voltage support), the schedule of the product (e.g. next hour, on peak for the next month, etc.), and the price. The marketers could be serving only themselves; however, more generally, the marketers will have collected a number of customers for whom they are acting as the broker for purchasing energy and services.
3. **Distribution System Operators:** The distribution system operators are responsible for operating the distribution system safely and efficiently with DER: implementing all DER schedules in their control area, monitoring the DER systems (either directly or indirectly), and ensuring that all DER units have tripped off in an emergency, while in general ensuring the secure and economic operation of the power system. The operators are also, generally, responsible for directing all maintenance and emergency activities on the power system.
4. **DER Operators:** The DER Operators are responsible for turning the DER systems on and off during normal operations, based on the needs of the DER Owners for their own use of the DER system, as well as on the requirements of any contractual DER schedule. Since this is clearly not a complex task, the DER Operators may be a person pushing a button on the DER device, or an automated controller/synchronizer with a built-in scheduler, or the Distribution System Operator with a remote control capability. The DER system will have the built-in capability to shut down or not turn on if it is unsafe for the device to operate.

5. **Distribution System Maintenance:** The field crews responsible for distribution system maintenance (usually under the direction of the distribution system operators) are also usually responsible for ensuring that DER devices are off and/or locked out of connecting to the power system. At other times, these field crews must be aware of the impact of their maintenance activities on DER and vice versa.
6. **DER Device Maintenance:** The personnel responsible for DER maintenance are responsible for ensuring that the DER system and their security shut-offs, are operating correctly.
7. **DER System:** The DER system itself must provide real-time data on its condition when queried, and respond to local and/or remote control commands, as well as protective relaying commands.
8. **Distribution Power System Protection:** If needed for security, the distribution power system protection devices issue long distance protection commands.
9. **Telecommunications Maintenance:** Telecommunications maintenance ensures the reliability and availability of the telecommunications capability. This function may be under utility control or may be the responsibility of a third party.

These DER Stakeholder roles are shown in Annex Figure 3.

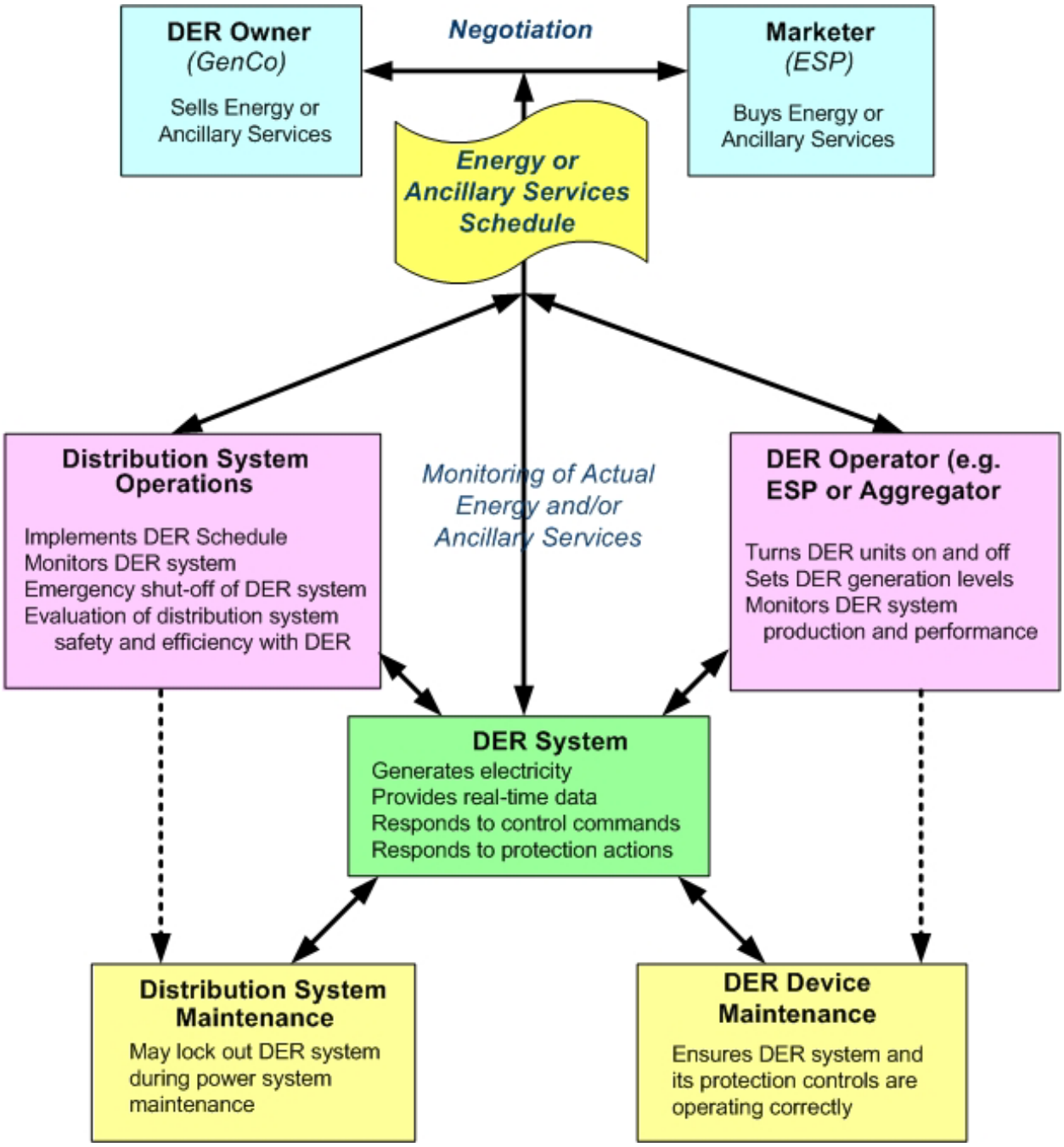

Annex Figure 3: DER Stakeholders

2.2 Functions Requiring Monitoring and Control of DER Systems

2.2.1 "Use Cases" as Method for Determining Information Exchange Requirements

Many power system functions require information from DER systems, as well as the ability to set parameters and issue control commands to DER units. These functions are the drivers for determining what monitoring and control capabilities are needed for developing a model of the information exchanges.

The best way to ensure that all information exchange requirements are met is to exhaustively analyze all functions that could be implemented. That said, much of the information to be exchanged are the same for different functions, and the availability of different types of information is determined by the equipment capabilities, the installation choices, and the degree of precision that the functions necessitate. Therefore, a more practical approach entails listing all functions (to ensure completeness), and then selecting a few that most likely cover all key information exchange requirements. These selected functions (acting as Use Cases[1]) are then assessed in detail to determine both the minimum, mandatory information exchange requirements, as well as the maximum, optional information exchange requirements.

The same function can vary in scope significantly, depending upon the purpose of the DER system in a particular installation. In addition, functions that are barely feasible today could become typical in the future. Therefore Use Cases are *useful* to determine initial and basic requirements, but they are necessarily just a *snapshot* of requirements; any successful model of information exchanges must allow for variable needs as well as future growth and modifications.

For instance, some of the basic monitoring and control functions include:

1. Occasional use for backup for the local EPS (within a customer site). It is never interconnected to the area EPS (utility-owned distribution power system).
2. Occasional use for additional generation for the local EPS. It is never interconnected to the area EPS. This could be for reducing load that is served by the area EPS.
3. Occasional use for additional generation while local EPS is interconnected with the area EPS. This could be for peak shaving or other situation necessitating reduction in load.
4. Full-time use as additional generation interconnected with the area EPS. This generation could be run independently by the DER owner, loosely coordinated with distribution operations, or tightly integrated and controlled by utility operations. The DER generation would typically be larger combined heating and power (CHP) or other co-generation systems.
5. Full-time use as market-driven generation interconnected with the area EPS. This could include responses to real-time pricing signals, requirements of distribution automation scenarios, formation of microgrids, etc.
6. Emergency use as part of an overall plan for prevention of power system outages and blackouts, as well as the recovery from outages and blackouts.

Because of this large range of different purposes, the types of data that are exchanged can vary significantly for the same function. Therefore, careful attention must be paid to what data is mandatory and what data is optional, as well as how the data is organized in the object models.

Some of the key functions are described in the following sections.

2.2.2 DER Owner/Operator Functions

In these Use Cases, DER owners manage their own DER systems locally. DER owner/operator functions are those functions required by DER owners and/or operators, including commercial customers, industrial customers, residential customers, as well as utilities if they own the DER systems. The DER system can be located at a customer site or at a utility site, such as in a substation. In these functions, the DER owner/operator owns and operates the DER directly: no third party is involved. Therefore, information exchange requirements would primarily involve the DER units, the DER plant system, and the local DER owner/operators.

Possible DER owner/operator functions include:

[1] Use Cases are used by the Unified Modelling Language (UML) and other similar processes to model the interactions and information exchange requirements among different functions, systems, and equipment.

1. The DER system is driven by the energy source, e.g. photovoltaic systems and wind power systems. The DER owner/operator monitors the system for energy output, performance statistics, and maintenance purposes.
2. The DER owner/operator uses DER as automatic backup for key internal load if main power is lost or may be lost (e.g. diesel generator). The DER system undertakes automatic start of DER device, disconnects from the utility power system, synchronizes and interconnects DER to local power system, and performs generation control to meet changing load requirements.
3. The DER owner/operator sets the DER system at a specific setpoint to provide a set level of generation (e.g. to offset load, to provide local generation for reliability and/or demand-response, to shave peaks).
4. The DER owner/operator establishes an intentional island: a permanent building/campus microgrid (e.g. utility power as backup).
5. The DER system is used exclusively for local load with net zero import/export. However, the utility power system is available for backup power.
6. The DER owner/operator uses the DER system primarily for internal loads, but includes an import/export interconnection to the utility power system. This interconnection is set for a fixed level of import or export of power.
7. The process which generates heat is main purpose of a Combined Heat and Power (CHP) system, so that only excess heat is used to generate power and provide it to the utility power system.
8. The DER owner plans the scheduling/bidding of DER generation in electricity marketplace, for energy, as ancillary services, as contracted, as per real-time pricing, etc. The DER operator then executes the schedules as required.
9. The DER operator manages DER system maintenance, including DER generator, prime mover, local EPS switching and protection, communications system, and the monitoring and control system
10. The DER system collects information, logs, and statistics, including operational information, performance, efficiency, emissions, environmental parameters, green power %, etc. This information may be available in real-time as well as historical.

2.2.3 Third-Party Remote Operation Functions

In these Use Cases, third parties operate the DER systems from remote locations. The third party remote operation functions include those in which energy service providers (ESPs), aggregators, utilities, or other entity manage the DER system from a remote site. The DER system can be located at a customer site or at a utility site, such as in a substation. Therefore, information exchange requirements would primarily involve the DER units, the DER plant system, DER owner/operators, and the remotely located ESPs, aggregators, and/or utilities.

Possible third party remote operation functions include:

1. The remote operator monitors DER system operational status only (on/off).
2. The remote operator monitors instantaneous metering (status, alarms, kW output, voltage, amps, statistics, etc.).
3. The remote operator monitors the entire DER environment (energy source, weather, emissions, protective relays, switches, etc.)
4. The remote operator dispatches a local operator to manually control the DER units.
5. Make-before-break DER system picks up a local load, then disconnects from the utility power system.

6. The utility issues a pricing signal which causes the DER system to generate at a specific level.
7. The remote operator sets the DER system at a specific setpoint to provide a fixed amount of generation (e.g. to offset load, to provide local generation for reliability and/or demand-response, to shave peaks).
8. The remote operator controls the DER system through automatic control (AGC) to meet specified operational needs and contracts (e.g. power quality, emissions, economic dispatch, energy schedules, ancillary service contracts, real-time pricing, local backup, interconnection with distribution system).
9. The remote operator dispatches field crew to perform manual switching operations on feeders with the DER system interconnected with the utility. Under most current situations, the DER system would be off or disconnected from the utility, but future situations might allow the DER system to remain on and interconnected.
10. The remote operator performs supervisory control of switching operations on feeders with DER systems connected to these feeders. The impact of this switching on the DER operations would need to be understood and taken into account, as well as the reverse: the impact of DER operations on the switching.
11. The remote operator performs control of load tap changers and/or voltage controllers with DER systems connected to the feeders. Since DER systems can have impacts and responses to changes in voltage, these interactions would need to be taken into account.
12. The remote operator performs control of capacitor bank switches (or other equipment that changes vars) with DER systems connected to the feeders. Since DER systems can have impacts and responses to changes in vars, these interactions would need to be taken into account.
13. The remote operator aggregates information from multiple DER systems for use by utility SCADA systems. This information would need to be collected and collated every few seconds from these widely dispersed DER systems.
14. The remote operator provides DER owners, utilities, and/or market operators with the results and other information on DER operations.
15. The remote operator manages local microgrid operations with DER systems. Since a microgrid must match generation to load, this management would involve some level of unit commitment and automatic generation control (AGC).
16. The ESP or utility reads interval/revenue meters (or metering per other tariff arrangements) for both the DER system and the local loads.
17. The ESP or utility handles settlements and billing for the DER owner.
18. Regulators and auditors monitor compliance of DER operations with contractual and environmental commitments.

2.2.4 Utility Automated Distribution Operations (ADO) Functions

In these Use Cases, utilities operate both their radial and networked distribution systems with many interconnected DER systems. If significant amounts of DER generation are connected to their distribution systems, these utilities will need additional automation which can monitor, control, and optimize operations. The DER systems could be located at customer sites or at utility sites, such as in substations.

The utility would need to monitor, control, and analyze these multiple DER systems in order to best manage power system reliability, power system efficiency, power quality assessment, outage management, market operations, and maintenance. Once the number of DER systems becomes large enough, this management would require significant automation of distribution

operations (ADO), which could be a combination of local automated field equipment and system-wide automated central analysis.

Possible ADO functions include:

1. ADO systems collect and analyze distribution operations with significant DER penetration. These ADO systems including basic SCADA, distribution state estimation and operational analysis, status estimation of controllable devices, load modeling and analysis, reliability assessment, dynamic limit calculations, power quality analysis, etc.
2. ADO systems operate DER systems in a substation or other utility facility for additional local generation and ancillary services.
3. ADO systems provide quality power to customers under normal conditions and/or as a result of predicted adverse conditions, based on coordinated volt-var control, contingency analysis, multi-level feeder reconfiguration, relay protection re-coordination, and feeder phase load and voltage balancing.
4. ADO systems manage planned outages for DER systems and distribution facilities, covering distribution operations analysis, DER availability analysis, multi-level feeder reconfiguration, coordinated volt-var control, reliability assessment, cold load pickup, and work order creation.
5. ADO systems, support market operations for the utility, through load forecasting of DER availability and dispatchable load analysis, look-ahead distribution system analysis, contract-oriented loss calculations, coordinated volt-var with real-time pricing, etc.
6. ADO systems support distribution and DER maintenance by providing performance and historical statistics of DER systems and distribution equipment, as well as risk assessments based on these statistics.
7. ADO systems coordinate distribution and DER operations with bulk power system operations, including real and reactive load/DER management, load shedding, load/DER transfer to different feeders, etc.
8. ADO systems support customer services through demand response, power quality assessment and management, real-time pricing analysis, and performance analysis.
9. ADO systems directly manage DER systems which are interconnected with the utility power system, through DER forecasting and scheduling, microgrid creation and management, injection and storage management, interconnection design, and performance monitoring.
10. ADO systems support database management through asset management, database consistency management, and database validation management.

2.2.5 Utility Emergency Operations Functions

In these Use Cases, the DER systems provide support for utility emergency operations (customer emergency operations were covered under DER owner/operator functions). The DER systems can be located at a customer site or at a utility site, such as in a substation, and are operated by utilities specifically to meet their emergency operational needs. These emergency needs could include protection schemes and actions, load shedding, alarm management, disturbance monitoring, emergency switching, and establishment of microgrids (intentional islanding).

Possible emergency operation functions include:

1. Protection equipment performs system protection actions on DER interconnections – fault detection, clearing, and reclosing.
2. Utility operators directly trip or verify the tripping of interconnected DER on loss of feeder power.

3. Utility operators manage emergency alarms from DER devices.
4. The utility SCADA system performs disturbance monitoring analysis, including DER responses.
5. ADO systems manage forced outages of DER and distribution facilities by supporting automated fault clearing (protective devices), fault indication, fault location, fault isolation, dynamic limit calculation, service restoration (manual or closed-loop switching), volt-var adjustment, DER control, microgrid creation, cold load pickup, paralleling check, relay re-coordination, etc.
6. Utility operators dispatch field crews to troubleshoot system and customer power problems, and provide them with real-time information from the DER site.
7. Utility operators dispatch field crews to troubleshoot communication systems and customer communication problems, and provide them with real-time information from the DER site.
8. Utility operators perform substation and feeder switching operations which involve DER interconnections.
9. Utility Operators shed loads and/or DER devices intentionally.
10. Outage management systems collect trouble calls and generate outage information on outages involving DER systems.
11. Microgrids of DER devices matched to loads are formed, operated, and eventually connected back into the distribution system.

2.2.6 Planning, Installation, Commissioning, and Maintenance Functions

In these Use Cases, DER systems are planned, installed, commissioned, and maintained by DER owners, ESPs, and/or utilities. The planning and implementation of DER systems involve longer term activities, with multiple parties involved in designing, testing, installing, and maintaining these systems. Some of the information exchanges could be non-electronic or through commercial electronic means. However some other information exchanges, particularly for maintenance activities, could require additional types of data and different means of communication (e.g. links to laptops).

Possible planning, installation, commissioning, and maintenance functions include:

1. DER system sizing, technology, configuration, and installation is planned and coordinated with utility, by providing ratings, configurations, planned usage, etc.
2. Distribution planners study the impact of planned DER installations on the distribution system, and integrate these results with other distribution upgrades and additions.
3. The DER implementer installs and tests DER devices in the local power system.
4. The DER operator tests the DER communications system performance and management capabilities.
5. The utility tests the DER installation when it is interconnected with the utility power system.
6. Vendors of different equipment (including DER systems, switches, protection, and communications system) gather real-time data and statistics, and perform troubleshooting of their own equipment.
7. The DER maintenance personnel maintain the DER system, accessing not only real-time measurements, but also historical and statistical information on DER performance, efficiency, emissions, and maintenance requirements.

2.3 Information Exchanges: What Data Should, Might, or Should Not Be Included in DER Object Models

2.3.1 Different Configurations Determine Scope of Information Exchanges

As can be deduced from the wide variety of functions described in the previous clause, DER systems can be implemented in many different configurations and can be operated with many different purposes and modes. One size does not fit all; ultimately the information exchanges specified for any specific implementation must reflect the actual requirements for that installation. However, the key is:

> ***If the same type of data is going to be exchanged in multiple implementations, then the same data name and data format should be used, in order for these implementations to be interoperable. This is the fundamental reason for developing these IEC 61850 DER object models.***

DER system configurations can range from the simple with little or no need for data exchanges, to the very complex with tremendous amounts of data exchanges required to ensure the DER systems are functioning as expected. Examples of the range of configurations are described in the following subclauses.

2.3.2 Configuration #1 – Single DER Unit with Manual Controls

The simplest configuration is a single DER unit with manual controls. In this configuration, the DER unit can be considered a "black box", and no standardized communications are required. Any communications internal to such a DER unit may use proprietary data formats, since interoperability is not an issue (see Annex Figure 4).

Examples of such configurations include:

- Small photovoltaic systems that may be manually connected and disconnected at a circuit breaker
- Batteries used as uninterruptible power for a local power system.

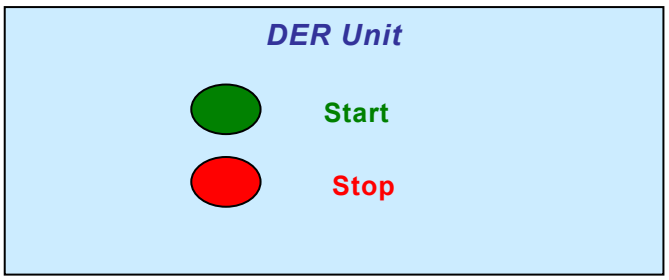

Annex Figure 4: Configuration #1 – Manual DER System

2.3.3 Configuration #2 – Standalone DER Unit Connected to a Local Controller

A very common configuration is a single, standalone DER unit connected to a local controller that provides a simple HMI (human-machine interface) for local interactions with the DER unit. The communications links between the DER device and the local controller are currently vendor proprietary. Since the HMI and these links are usually packaged as a unit, it may not be necessary or beneficial at this time to standardize the information flows on these links.

Therefore, any communications internal to such a DER system may use proprietary data formats, since interoperability is not an issue (see Annex Figure 5).

Examples of such configurations include:

- Diesel generators and their controllers used as customer backup to utility power
- Photovoltaic systems with solar tracking controllers

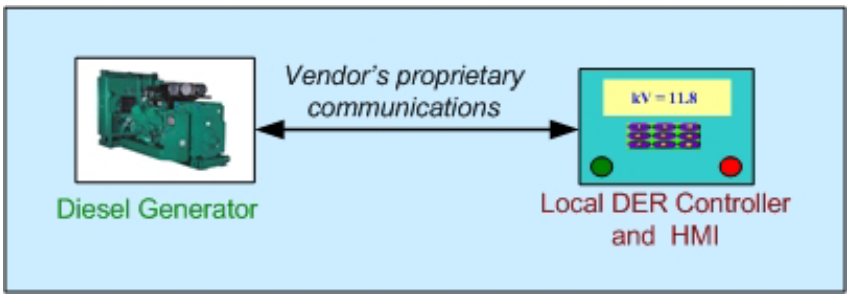

Annex Figure 5: Configuration #2 – Standalone DER with Local Controller/HMI

2.3.4 Configuration #3 – Local DER Management System

Another configuration is a local DER Management System controlling to a single or multiple DER units. The DER Management System also monitors, controls, and maintains the local power system, including the switching operations of DER units and local loads. This DER Management System may be a system that handles the scheduling and running of DER units only or it could be a part of a Building Automation System (BAS). The BAS would combine the scheduling and management of the loads within a customer's site with the scheduling and management of the DER generation (see Annex Figure 6).

Since this configuration requires communications between control systems and power system equipment that are very likely to be manufactured by different vendors, the need for standardization of information exchanges becomes critical. Specifically, these interfaces would be between the DER Management System and the Local Controller/HMI, the local loads, the local switches, and the local protective relays. These interfaces are shown as curved red pointers in the figure.

Examples of such configurations include:

- Combined heat and power (CHP) system used to generate electricity with the heat by-product of an industrial process
- Small hydro plant that manages both electricity production and water flow requirements
- Wind turbines in a wind farm
- Diesel generator used for peak shaving in an industrial plant with a demand-based tariff
- Fuel cell system used in a substation

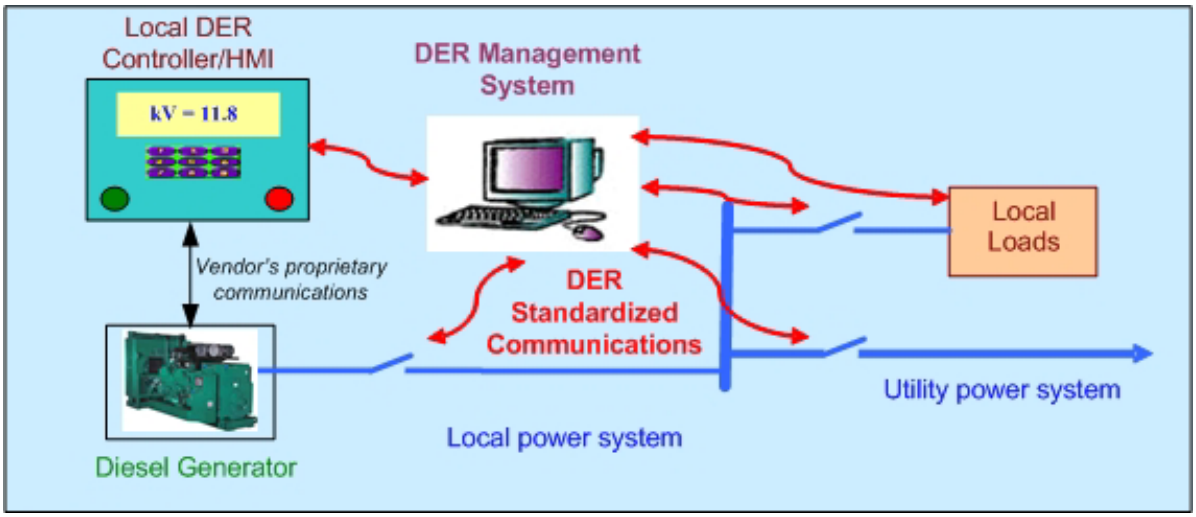

Annex Figure 6: Configuration #3 – Local DER Management System

2.3.5 Configuration #4 – Remote DER Master Station for Multiple DER Systems

A more complex configuration involves the use of a remote DER master station to monitor and control one or more DER systems. This remote DER master station could be an aggregator's system, a utility's energy management system, or a building management system that handles multiple DER installations, providing different levels of monitoring, control, statistics-gathering, and maintenance support (see Annex Figure 7).

The information exchange requirements for this configuration expand from management of the local power system to the management of multiple power systems with different local environments and different contractual relationships with the remote system. Although the communications would most likely be through the DER management systems, alternative configurations could involve communications directly to the local DER controller/HMI.

Since this configuration requires communications between remote systems and DER management systems that are very likely to be manufactured by different vendors, the need for standardization of information exchanges becomes critical. These interfaces are shown as curved red pointers in the figure.

Examples of such configurations include:

- A commercial company has multiple office sites nation-wide, each with a DER system for backup and for peak shaving. An aggregator has been contracted to manage the DER systems on all sites.
- A university campus has many buildings, each with different CHP systems. An energy service provider has been contracted to manage these CHP systems.
- An energy service provider manages multiple wind farms across state and country borders.

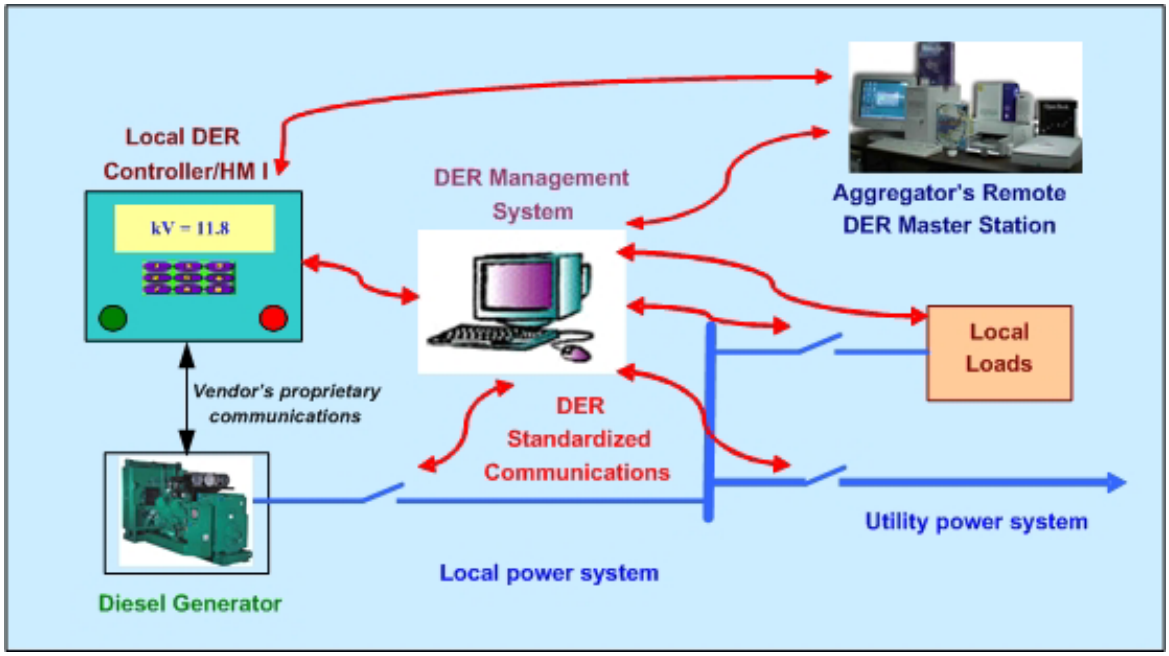

Annex Figure 7: Configuration #4 – Remote DER Master Station

2.3.6 Configuration #5 – Utility Operations Managing DER Systems

Utility operations can directly manage multiple different DER systems as part of distribution operations, possibly including market operations. At a simple level, the distribution operations could simply monitor these DER systems; while at more complex levels the distribution operations could actively manage the DER systems for volt/var control, schedule the DER systems for energy and ancillary services in the energy marketplace, utilize DER systems for emergency responses, and initiate deliberate islanding of the power system into "microgrids" for economic or emergency reasons (see Annex Figure 8).

The information exchange requirements for this scenario involve many different systems with many variations on what information will be needed by what system, and when and how. Standards are therefore crucial.

Examples of such configurations include:

- A utility manages sets of fuel cells at multiple substations. These are used for voltage support and peak shaving.
- A utility manages a group of hotels which each have DER systems. If utility power is lost, these hotels form a microgrid to provide at least emergency generation for the group.

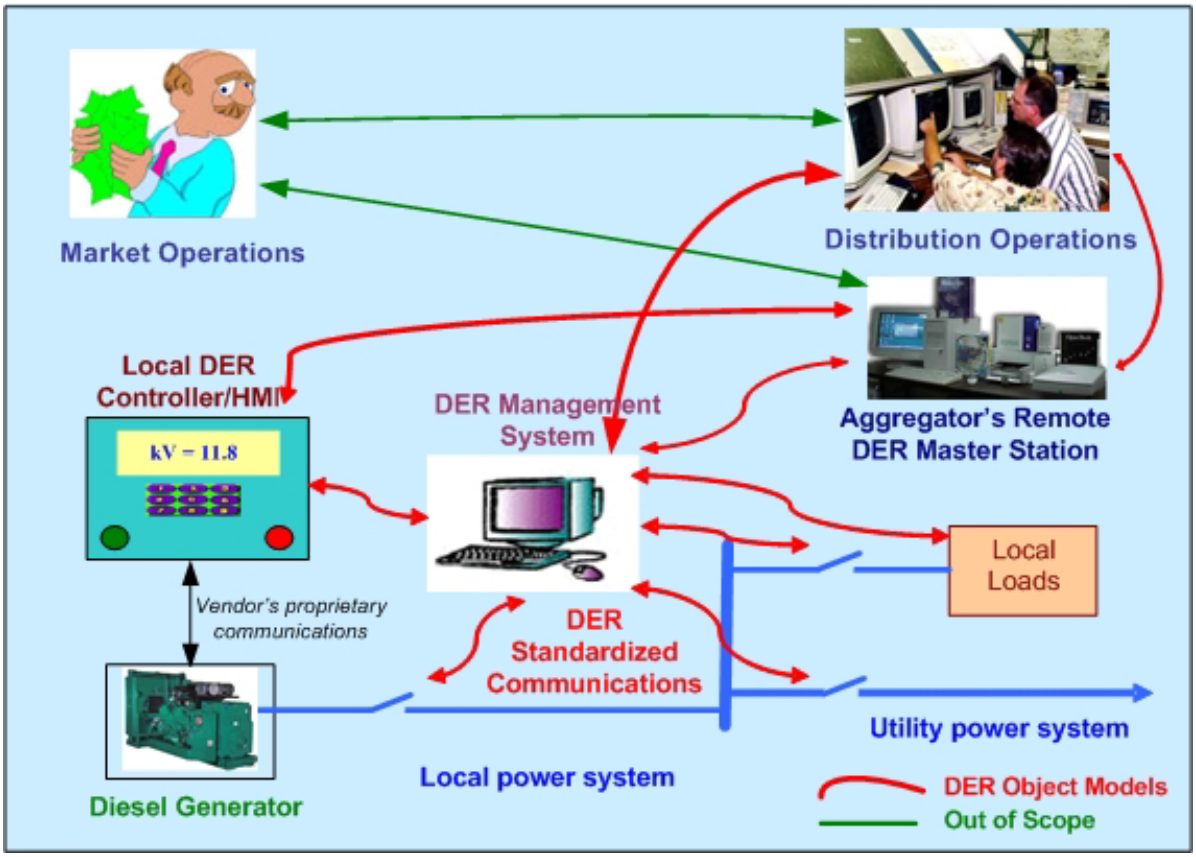

Annex Figure 8: Configuration #5 – Distribution Operations Managing DER Systems

3 Examples of Using DER Logical Nodes in DER Implementations (Informative)

3.1 Generic DER Installation Configuration

As can be seen from the different configurations above, DER systems can be implemented in many different ways. In addition, DER systems themselves are made up of different modules, some of which are similar between types of DER and others of which are unique to each DER type. As can be seen in the normative information modeling clauses, this decomposition into modules is very important.

Annex Figure 9 shows a block diagram of a generic DER system in which the relationships between (normative) logical nodes (LNs) and the (informative) DER logical devices (LDs) is illustrated. The Red LNs are new for DER; the Blue LNs already exist. The block diagram illustrates LNs in the following logical devices:

1. DER Systems
   - DER Plant Electrical Connection Point (ECP)
   - DER Unit Controller
   - DER Generation
   - DER Excitation
   - DER Inverter/Converter
2. Specific Types of DER Systems
   - Reciprocating Engine (e.g. diesel engine)
   - Fuel Cell
   - Photovoltaic System
   - Combined Heat and Power
3. Auxiliary Systems
   - Interval Meter
   - Fuel System
   - Battery System
   - Physical Measurements

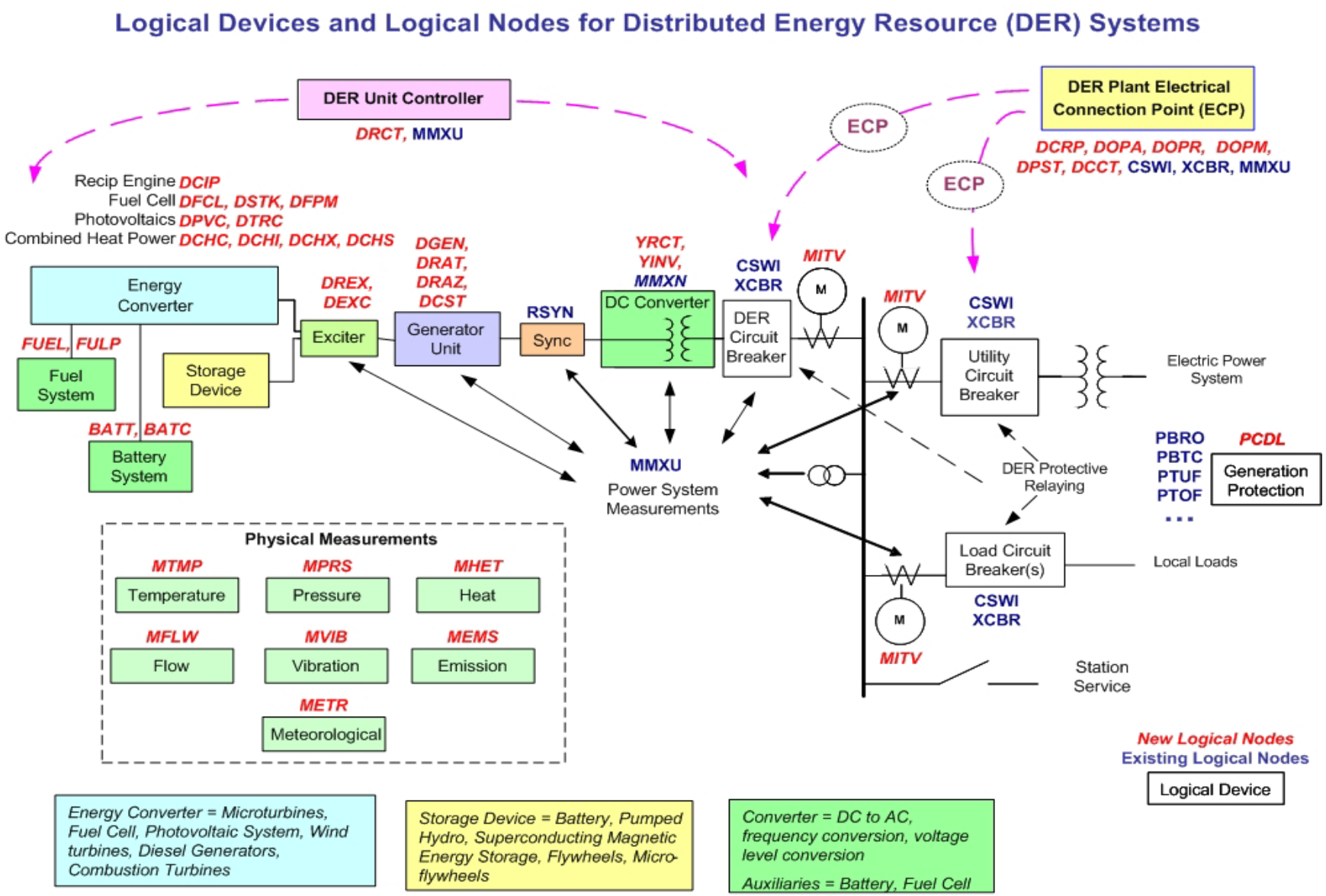

Annex Figure 9: Block Diagram of a Generic Distributed Energy Resources (DER) System

DER Plant Electrical Connection Point (ECP) Logical Device

The DER Plant Electrical Connection Point (ECP) Logical Device defines the characteristics of the DER plant at the point of electrical connection between one or more DER units and any electric power system (EPS), including isolated loads, microgrids, and the utility power system. Usually there is a switch or circuit breaker at this point of connection.

In a simple DER configuration, there is one ECP between a single DER unit and the utility power system. However, as shown in Annex Figure 10, there may be more ECPs in a more complex DER plant installation. In this figure, ECPs exist between:

- Each single DER unit and the local bus
- Each group of DER units and a local power system (with load)
- Multiple groups of DER units and the utility power system

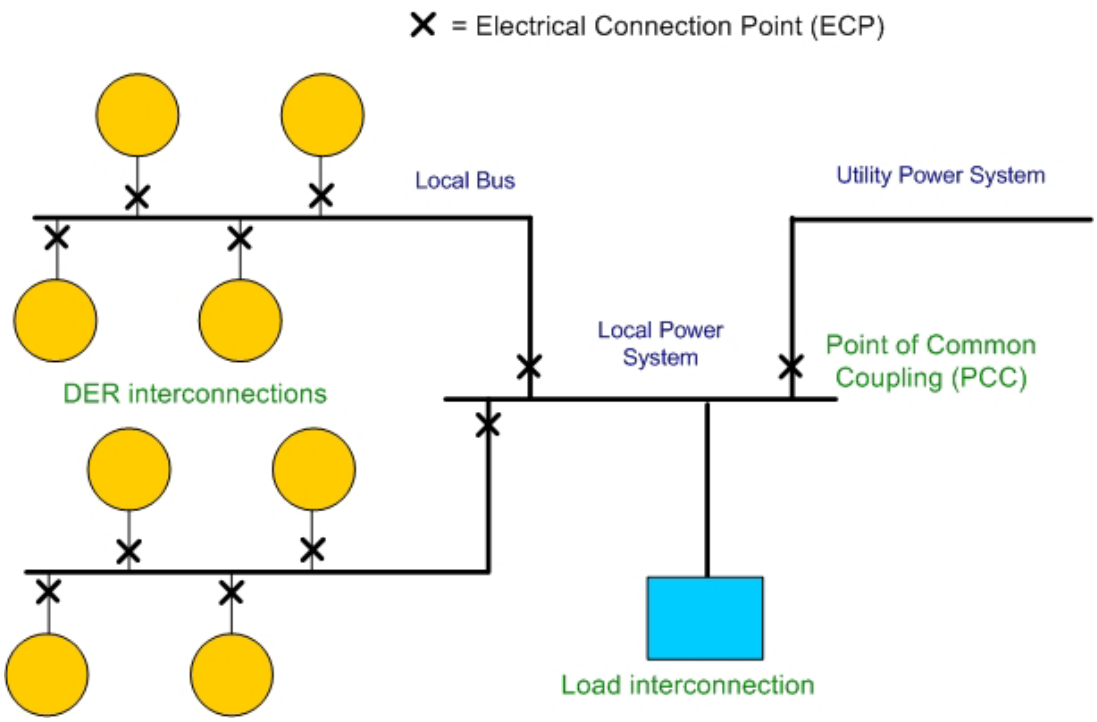

Annex Figure 10: Illustration of Electrical Connection Points (ECP) in a DER Plant

The ECP between a local DER power system and a utility power system is defined as the Point of Common Coupling (PCC) in the IEEE 1547 "*Standard for Interconnecting Distributed Resources with Electric Power Systems*". Although typically the PCC is the electrical connection between a utility and a non-utility DER plant, this is not always true: the DER plant may be owned/operated by a utility, and/or the EPS may be owned/operated by a non-utility entity, such as a campus power system or building complex.

DER systems have economic dispatch parameters related to their operations which are important for efficient operations, and will increasingly be used directly or indirectly in market operations, including Demand Response, Real-Time Pricing, Advanced Distribution Automation, and bidding into the auxiliary services energy marketplace.

Examples of installations with multiple ECPs include:

- One DER device is connected only to a local load through a switch. The connection point is the ECP.

- Groups of similar DER devices are connected to a “bus” which feeds a local load. If the group is always going to be treated as a single generator, then just one ECP is needed where the group is connected to the “bus”. If there is a switch between the “bus” and the load, then the bus has an ECP at that connection point.
- Multiple DER devices (or groups of similar DER devices) are each connected to a “bus”. That “bus” is connected to a local load. In this case, each DER device/group has an ECP at its connection to the bus. If there is a switch between the “bus” and the load, then the bus has an ECP at that connection point.
- Multiple DER devices are each connected to a “bus”. That “bus” is connected to a local load. It is also connected to the utility power system. In this case, each DER device has an ECP at its connection to the bus. The bus has an ECP at its connection to the local load. The bus also has an ECP at its connection to the utility power system. This last ECP is identical to the IEEE 1547 PCC.

ECP Logical Devices would include the following Logical Nodes as necessary for a particular installation. These LNs may or may not actually be implemented in an ECP Logical Device, depending upon the unique needs and conditions of the implementation. However, these LNs handle the ECP issues:

- **DCRP**: DER plant corporate characteristics at the ECP, including ownership, operating authority, contractual obligations and permissions, location, and identities of all DER devices connected directly or indirectly at the ECP
- **DOPA**: DER operational control authorities at the ECP, including the authority to open the ECP switch, close the ECP switch, change operating modes, start DER units, stop DER units. This LN could also be used to indicate what permissions are currently in effect.
- **DOPR**: DER plant operational characteristics at the ECP, including types of DER devices, types of connection, modes of operation, combined ratings of all DERs at the ECP, power system operating limits at the ECP
- **DOPM**: DER operating mode at the ECP. This LN can be used to set available operating modes as well as actual operating modes.
- **DPST**: Actual status at the ECP, including DER Plant connection status, alarms
- **DCCT**: Economic dispatch parameters for DER operations
- **XCBR, CSWI**: Switch or breaker at the ECP and/or at the load connection point (see IEC 61850-7-4)
- **MMXU**: Actual power system measurements at the ECP, including (as options) active power, reactive power, frequency, voltages, amps, power factor, and impedance as total and per phase (see IEC 61850-7-4)
- **MITV**: Interval metering information at the ECP, including interval lengths, readings per interval

Recommendations on historical and statistical logging are not standard, but could be included as informative.

3.1.1 DER Device Controller Logical Device

The DER device controller logical device defines the operational characteristics of a single DER device, regardless of the type of generator or prime mover.

This DER device can contain the following Logical Nodes:

- **DRCT**: DER unit controller characteristics, including what type of DER, electrical characteristics, ratings, etc

- **MMXU**: DER self serve active and reactive power measurements

3.1.2 DER Generator Logical Device

Each DER unit has a generator. Although each type of DER provides different prime movers for its generator, thus requiring different prime mover logical nodes, the general operational characteristics of these generators are the same across all DER types. Therefore, only one DER generator model is required.

The DER generator logical device describes the generator characteristics of the DER unit. These generator characteristics can vary significantly, depending upon the type of DER device.

The LNs in the DER Generator Logical Device could include:

- **DGEN**: DER generator operations
- **DRAT**: DER basic generator ratings
- **DRAZ**: DER advanced generator features
- **DREX**: DER excitation ratings
- **DEXC**: Excitation component of generator
- **RSYN**: Synchronization (See IEC 61850-7-4 with expected enhancements)
- **DCST**: Costs associated with generator operations

3.1.3 DER Excitation Logical Device

DER excitation comprises the components of a DER that handles the excitation systems used to start the generator. The LNs include:

- **DREX**: Excitation ratings
- **DEXC**: Excitation operations

3.1.4 Inverter/Converter Logical Device

Some DER generators require rectifiers, inverters, and other types of converters to change their electrical output into end-user AC. The LNs for the inverter/converter logical device could include:

- **YRCT**: Rectifier for converting alternating current to continuous, direct current (AC -> DC)
- **YINV**: Inverter for converting direct current to alternating current (DC -> AC)
- **MMXN**: Measurement of intermediate DC
- **MMXU**: Measurements of input AC (See IEC 61850-7-4)
- **MMXU**: Measurements of output AC (See IEC 61850-7-4)

3.2 Reciprocating Engine (Diesel GenSet) Logical Device

3.2.1 Reciprocating Engine Description

A reciprocating engine is an engine that utilizes one or more pistons in order to convert pressure into a rotating motion.

Today the most common form of reciprocating engines is the internal combustion engine using the burning of gasoline, diesel fuel, oil or natural gas to provide pressure (see Annex Figure 11). This figure illustrates the components of a typical, four stroke cycle, DOHC reciprocating engine: (E) Exhaust camshaft, (I) Intake camshaft, (S) Spark plug, (V) Valves, (P) Piston, (R) Connecting rod, (C) Crankshaft, (W) Water jacket for coolant flow.

There may be one or more pistons. Each piston is located inside a cylinder, into which a fuel and air mixture is introduced, and then ignited. The now hot gases expand, pushing the piston away. The linear movement of the piston is converted to a circular movement via a connecting rod and a crankshaft. The more cylinders a piston engine has, the more power it is capable of producing, so it is common for such engines to be classified by the number and alignment of cylinders. Single- and two-cylinder engines are common in smaller vehicles such as motorcycles; automobiles, locomotives, and ships may have a dozen cylinders or more. These engines are known collectively as internal-combustion engines, although internal-combustion engines do not necessarily contain pistons.

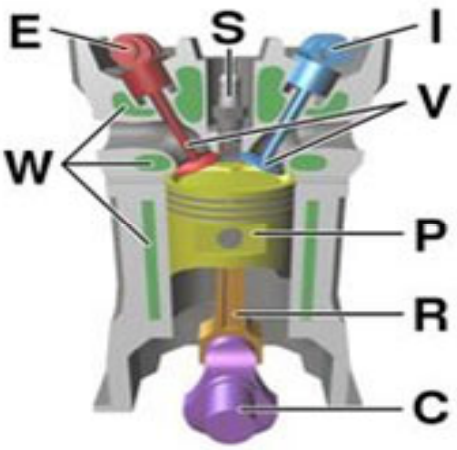

Annex Figure 11: Reciprocating engine *(Wikipedia)*

3.2.2 Reciprocating Engine Logical Device

The LNs in this section cover the object models for the reciprocating engine energy converter. Annex Figure 12 illustrates the LNs in a reciprocating engine system.

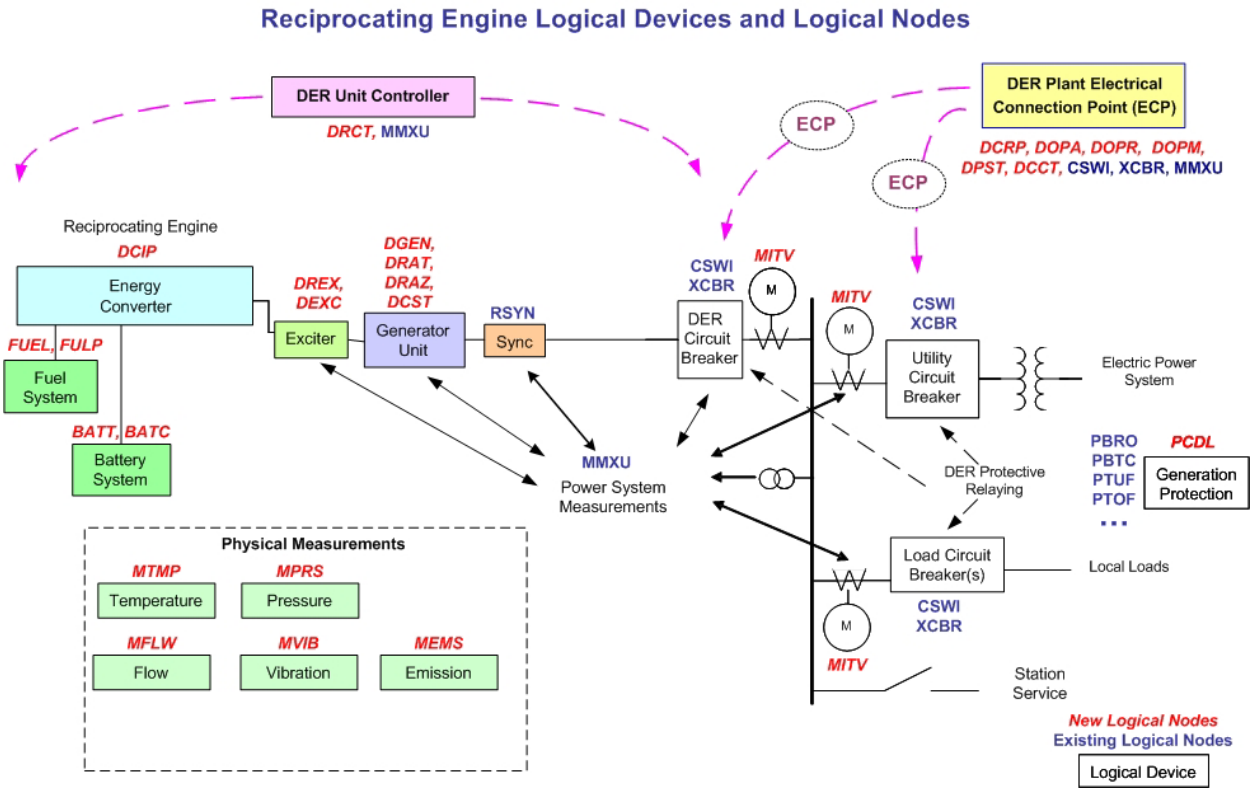

Annex Figure 12: LNs in a Reciprocating Engine System (e.g. Diesel Gen-Set)

The Logical Nodes in the reciprocating engine logical device include:

- **DCIP**: Reciprocating engine characteristics, measured values, and controls
- **DRCT**: DER general controller characteristics
- **MITV**: Metering information
- **FUEL**: Fuel characteristics
- **BATT**: Auxiliary battery
- **BATC**: Auxiliary battery charger
- **MTMP**: Temperature characteristics, including coolant (e.g. air, water) intake, exhaust (outlet), manifold, engine, lubrication (oil), after-cooler, etc.
- **MPRS**: Pressure characteristics, including coolant (e.g. air, water) intake, exhaust (outlet), manifold, engine, turbine, lubrication (oil), after-cooler, etc.
- **MFLW**: Flow characteristics, including coolant, lubrication, etc.
- **MEMS**: Emissions characteristics, including coolant (e.g. air, water) intake, exhaust (outlet), manifold, engine, turbine, lubrication (oil), after-cooler, etc. (see Clause **Error! Reference source not found.**)
- **MVIB**: Vibration characteristics (See Clause **Error! Reference source not found.**)

3.3 Fuel Cell Logical Device

3.3.1 Fuel Cell Description

A fuel cell is an electrochemical energy conversion device similar to a battery, but differing from the latter in that it is designed for continuous replenishment of the reactants consumed; i.e. it produces electricity from an external supply of fuel and oxygen as opposed to the limited internal energy storage capacity of a battery. Additionally, the electrodes within a battery react and change as a battery is charged or discharged, whereas a fuel cell's electrodes are catalytic and relatively stable. A diagram of a fuel cell is shown in Annex Figure 13.

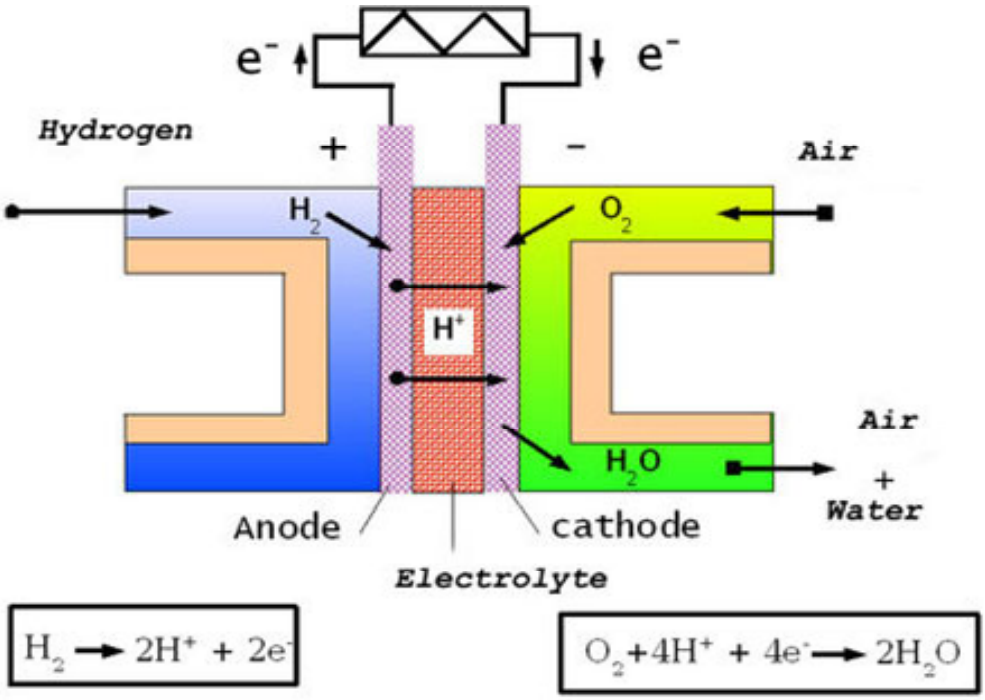

Annex Figure 13: Fuel cell – Hydrogen/oxygen proton-exchange membrane fuel cell (PEMFC) (*Wikipedia)*

A typical fuel cell produces about 0.8 volts. To create enough voltage for the many applications requiring higher voltage levels, the cells are layered and combined in series and parallel into a "Fuel Cell Stack" (see Annex Figure 14). The number of cells used is usually greater than 45 and varies with design. The theoretical voltage of a fuel cell is 1.23 volts, at a temperature of 25°C. This voltage depends on the fuel used, quality and temperature of the cell.

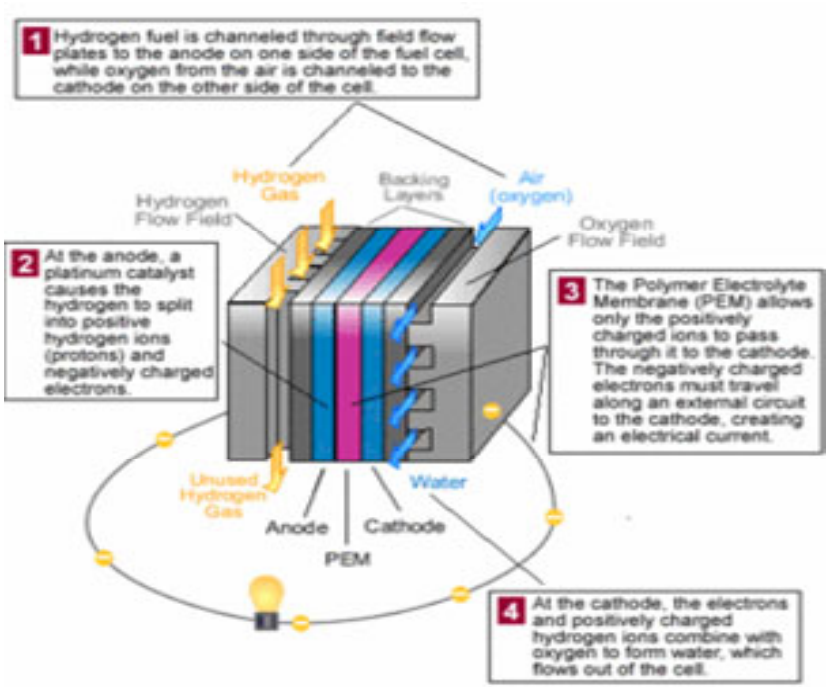

Annex Figure 14: Fuel Cell Stack

3.3.2 Fuel Cell Logical Device

The LNs in this section describe the object models for the fuel cell as a prime mover. Annex Figure 15 illustrates the LNs used in a Fuel Cell system.

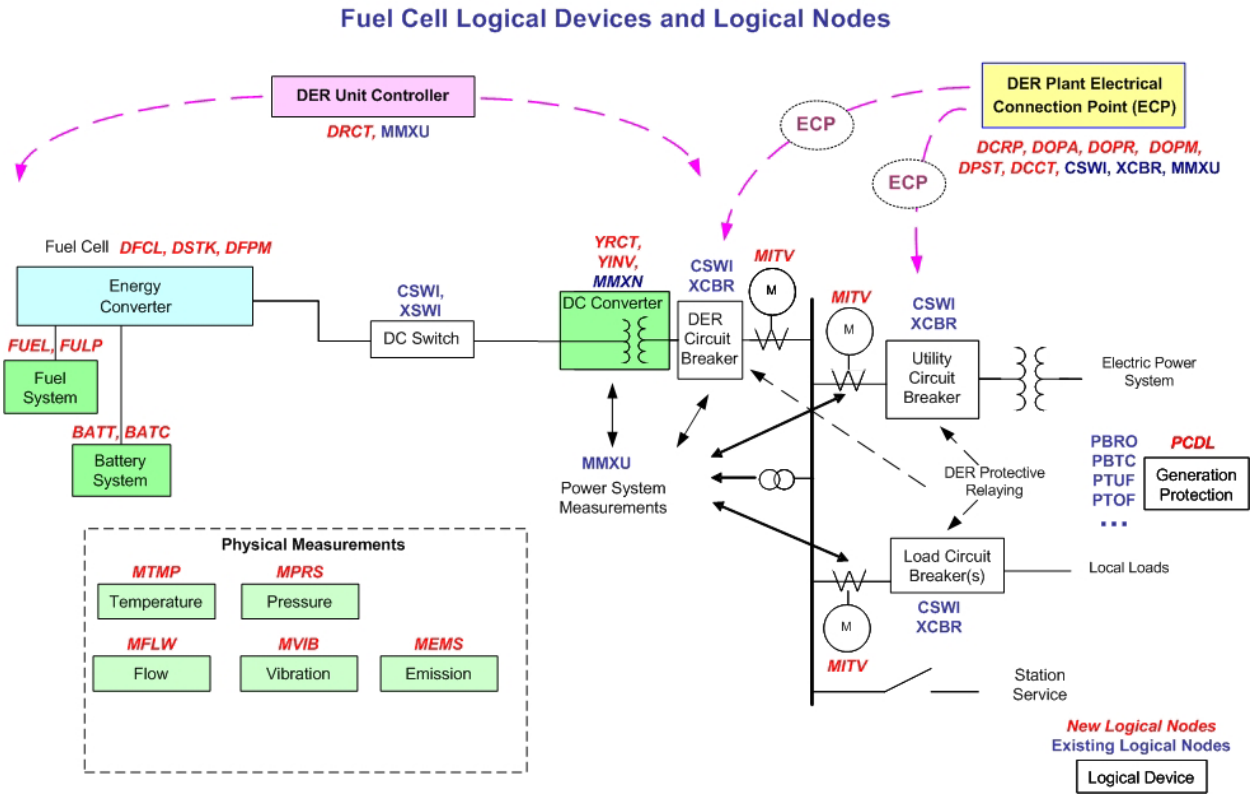

Annex Figure 15: LNs Used in a Fuel Cell System

The fuel cell logical device would include the following LNs:

- **DFCL**: Fuel cell controller characteristics. These are the fuel cell specific characteristics which are not in DRCT
- **DSTK**: Fuel cell stack
- **DFPM**: Fuel processing module
- **CSWI**: Switch between fuel cell and inverter (see IEC 61850-7-4)
- **YINV**: Inverter (see Clause **Error! Reference source not found.**)
- **MMXU**: Output electrical measurements (see IEC 61850-7-4)
- **MMXN**: Measurement of intermediate DC
- **DRCT**: DER general controller characteristics (see Clause **Error! Reference source not found.**)
- **MITV**: Metering information (see Clause **Error! Reference source not found.**)
- **FUEL**: Fuel characteristics (See Clause **Error! Reference source not found.**)
- **BATT**: Auxiliary battery (See Clause **Error! Reference source not found.**)
- **BATC**: Auxiliary battery charger (See Clause **Error! Reference source not found.**)
- **MTMP**: Temperature characteristics, including coolant (e.g. air, water) intake, exhaust (outlet), etc. (See Clause **Error! Reference source not found.**)

- **MPRS**: Pressure characteristics, including intake (e.g. air, oxygen, water), exhaust (outlet), manifold, engine, turbine, lubrication (oil), after-cooler, etc. (See Clause **Error! Reference source not found.**)
- **MEMS**: Emissions characteristics, including coolant (e.g. air, water) intake, exhaust (outlet), after-cooler, etc. (See Clause **Error! Reference source not found.**)
- **MVIB**: Vibration characteristics (See Clause **Error! Reference source not found.**)

3.4 Photovoltaic Systems Logical Device

3.4.1 Photovoltaic System Description

A photovoltaic power system, commonly referred to as a PV system, directly converts solar energy into electricity. This process does not use heat to generate electricity and therefore no turbine or generator is involved. In fact, a PV module has no moving part.

PV systems are modular – the building blocks (modules) come in a wide range of power capabilities. These modules can be connected in various configurations to build power systems capable of providing several megawatts of power. However, most installed PV systems are much smaller.

The basic unit of photovoltaic conversion is a semiconductor device called the PV cell. A PV module is the smallest complete environmentally protected assembly of interconnected cells. These modules are themselves assembled to form a PV array. Basically, the PV array is considered to be a DC power supply unit. Modules can be connected in series (PV string), in parallel, or in a combination of series-parallel. In a large system, PV arrays are often divided into sub-arrays.

PV power systems can be standalone (not connected to the power system), hybrid (combined with another energy source), or interconnected (connected with the power system). The photovoltaic system covered by this standard is interconnected with the power system. Therefore, there is no obligation to provide additional energy storage (e.g. battery system), although this may be included.

Since the power system requires AC power for interconnected generation, a power conditioning unit (PCU) or inverter is required to transform the DC output of the PV array into AC. Inverters used in PV system have the added task of adjusting the current and voltage levels (DC) to maximize efficiency during changing solar irradiance and temperature condition. The optimal combination for a PV module is defined by a point called *maximum power point* (MPP) on the I-V curve. The temperature of the module is another important element that affects the power output.

Annex Figure 16 illustrates a small interconnected PV system using multiple inverters. In this example, the PV arrays are composed of two modules.

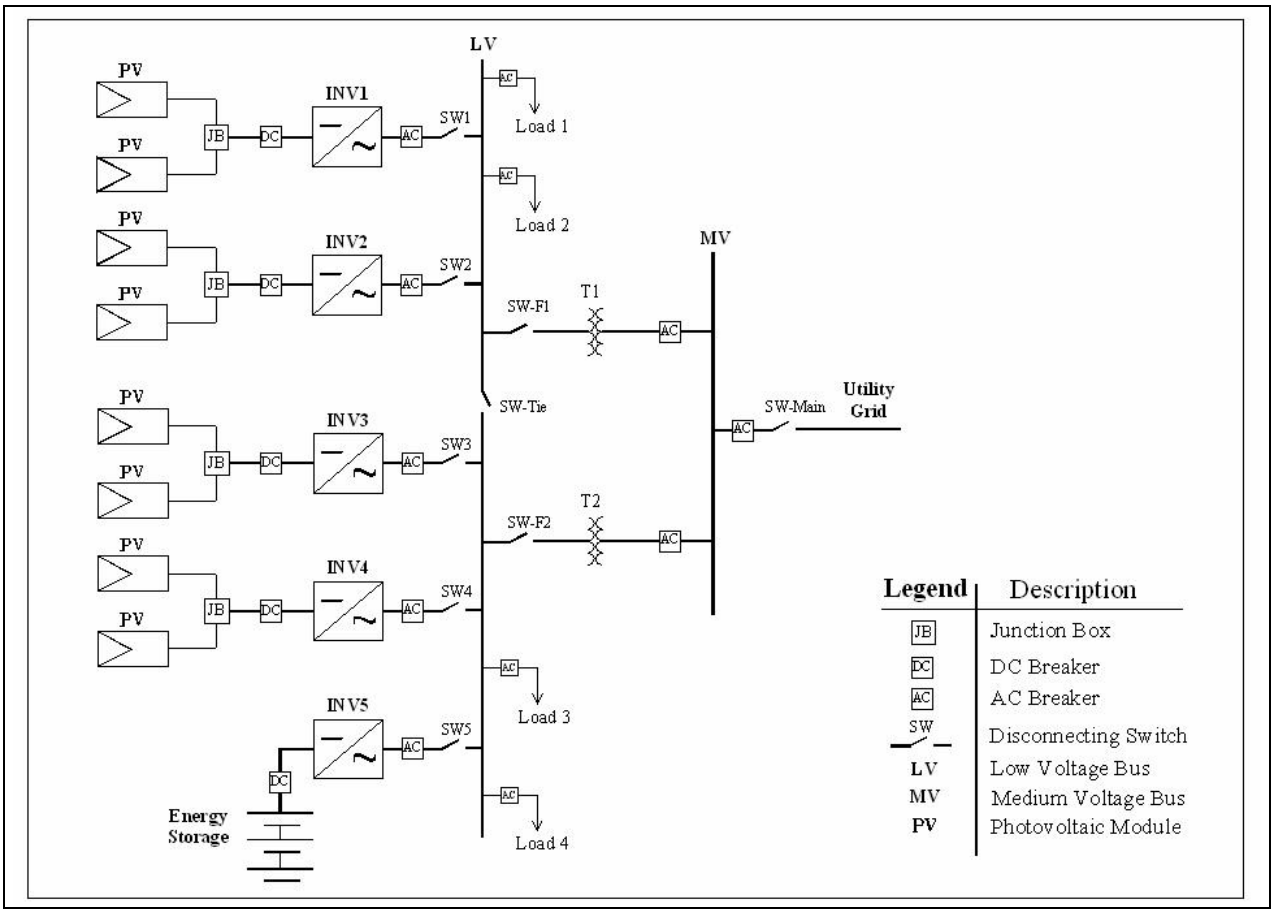

Annex Figure 16: One line diagram of an interconnected PV system

A larger and more complex PV array can be used in a larger system. Annex Figure 17 gives an illustration of such a PV system.

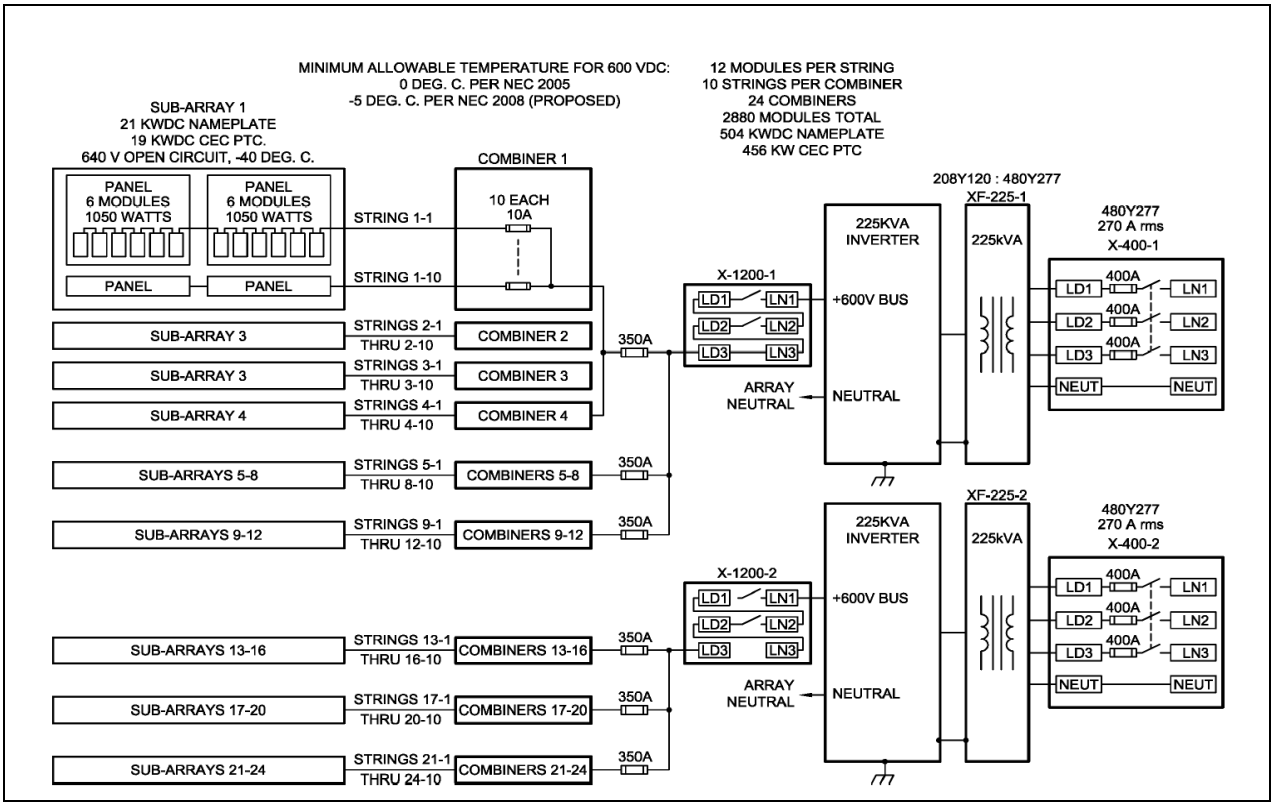

Annex Figure 17: PV array diagram - large array divided in sub arrays

The LNs in this section describe the object models for the photovoltaics system as a prime mover. **Error! Reference source not found.** illustrates these Logical Nodes associated with one configuration of a photovoltaics system, although actual implementations may vary, depending upon the system requirements.

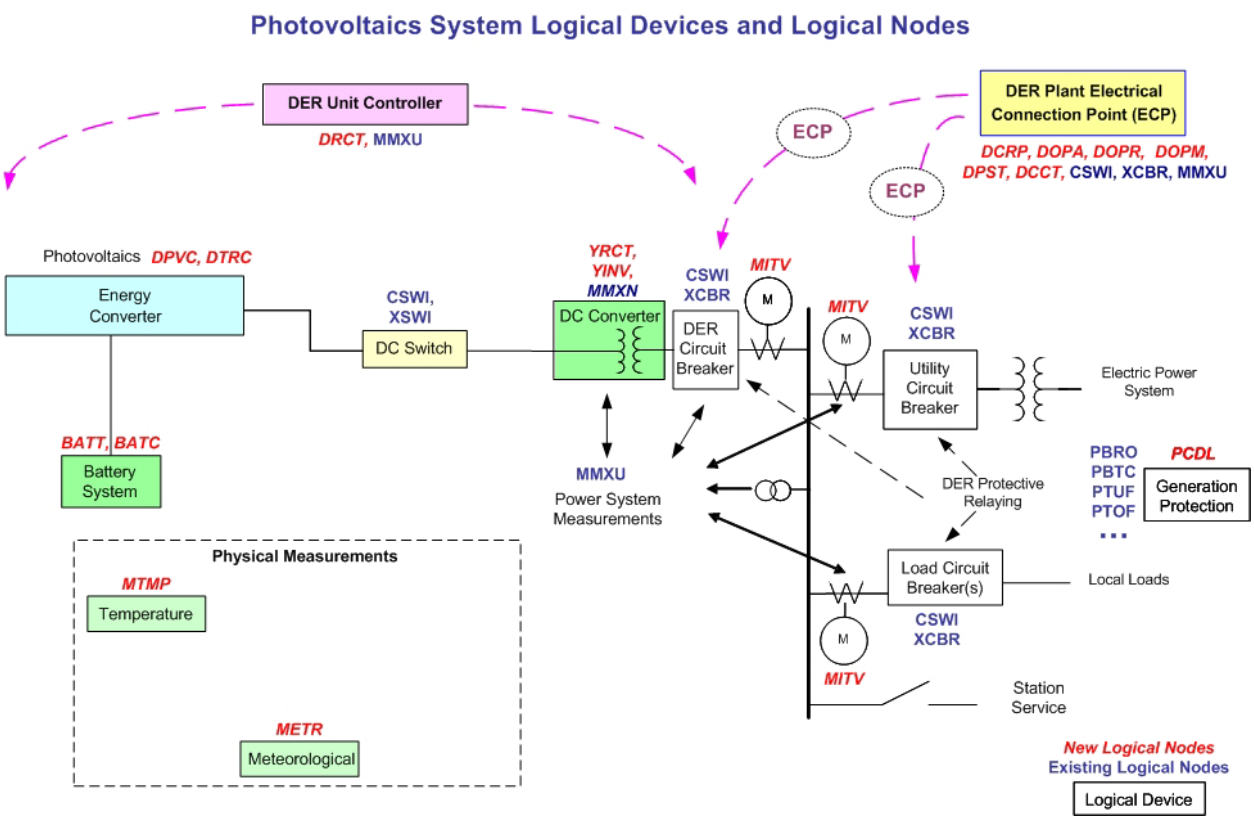

Figure 3-1: LNs Associated with a Photovoltaics System

Building a logical device to automate the operation of a PV system would require these functions:

- **Switchgear operation:** functions for the control and monitoring of breakers and disconnect devices. This is already covered in 61850-7-4 (XCBR, XSWI, CSWI…).
- **Protection:** functions required to protect the electrical equipment and personnel in case of a malfunction. Already covered in 61850-7-4 (PTOC, PTOV, PTTR…).
- **Measuring and metering:** functions required to obtain electrical measurements like voltage and current. AC measurements are already covered in 61850-7-4 (MMXU). DC measurements are covered as MMXN.
- **DC to AC conversion:** functions for the control and monitoring of the inverter. Covered in this standard (YINV).
- **Array operation:** functions to maximize the power output of the array. These include adjustment of current and voltage level to obtain the MPP and also the operation of a tracking system to follow the sun movement. Specific to PV and covered in this standard.
- **Cooling:** functions to control the temperature of the PV arrays. Covered in this standard (MTMP).
- **Islanding:** functions required to synchronize the PV system to the power system. Covered in this standard (DRCT, DROP). RSYN covered in IEC 61850-7-4
- **Energy storage:** functions required to store excess energy produced by the system. Energy storage in a PV system is usually done with batteries. Covered in this standard (BATT, BATC).
- **Environment monitoring:** functions required to obtain environmental measurement like solar irradiation and ambient temperature. Covered in this standard (METR).

The photovoltaics system logical device could include the following logical nodes:

- **DPVE**: PV Array engineering. Able to maximize the power output of the array. One instance of the logical node per array (or sub-array) in the PV system.
- **DPVC**: PV Array controller. Able to maximize the power output of the array. One instance of the logical node per array (or sub-array) in the PV system.
- **DTRC**: Tracking controller. Able to follow the sun movement. One instance of the logical node per PV system.
- **CSWI**: Switch between the PV system and the inverter (see IEC 61850-7-4)
- **YINV**: Inverter (see Clause **Error! Reference source not found.**)
- **MMXN**: Measurement of intermediate DC (see IEC 61850-7-4)
- **DRCT**: DER general controller characteristics (see Clause **Error! Reference source not found.**)
- **MMXU**: Electrical measurements (see IEC 61850-7-4)
- **MITV**: Metering information (see Clause **Error! Reference source not found.**)
- **BATT**: Battery if needed for energy storage (see Clause **Error! Reference source not found.**)
- **BATC**: Battery charger if needed for energy storage (see Clause **Error! Reference source not found.**)
- **MTMP**: Temperature characteristics (see Clause **Error! Reference source not found.**)
- **METR**: Meteorological measurements (see Clause **Error! Reference source not found.**)

3.5 Combined Heat and Power Logical Device

3.5.1 Combined Heat and Power Description

Combined Heat and Power (CHP) covers multiple types of generation systems involving heat. Different CHP purposes include:

- Heat is produced through an industrial process. Rather than using energy to cool the heated medium (typically water or other fluid), the heat is used to run a turbine (e.g. steam turbine) which in turn connects to a generator to produce electrical energy.
- Fuel is burned in order to create heat (e.g. for heating buildings), and this heat is also used to generate electrical energy (e.g. gas /combustion turbine).
- Inexpensive fuel is available (e.g. produced by landfill or biomass) which can then be burned to generate electricity and/or heat.

There are many variations on these themes (ownership of different equipment, market interactions with respect to heat and energy, constraints on heat or electrical production, etc.). Annex Figure 18 illustrates two configurations.

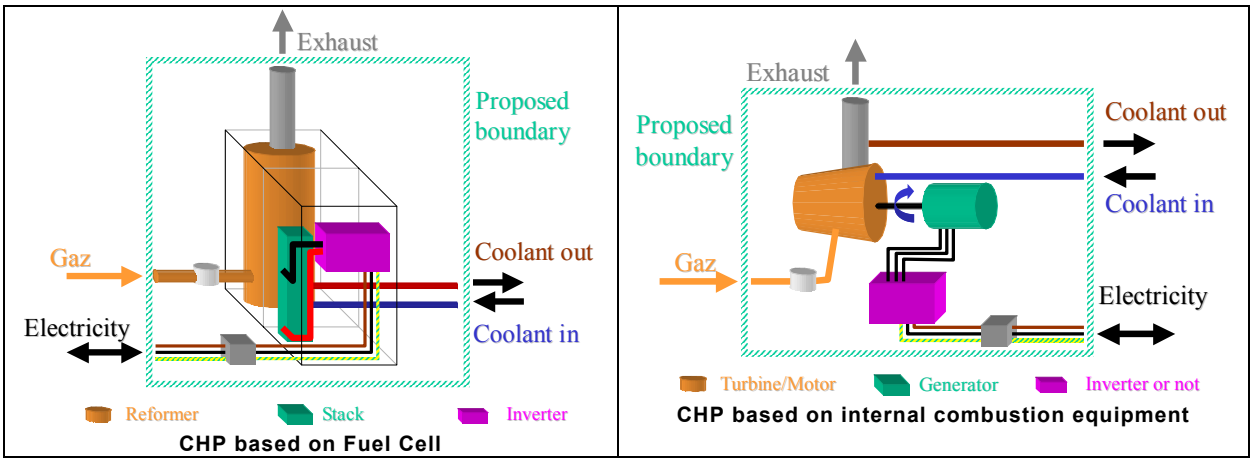

Annex Figure 18: Two Examples of CHP Configurations

The difficulties in defining a generic CHP model come from, among other reasons:

- The large variety of different types, purposes, and operational characteristics of CHP systems
- The heterogeneous maturity of CHP systems

Due to the variety of current thermal facility schemes and prime movers used in CHP configurations, it is not possible to develop a unique model of a CHP system. Therefore, rather than attempting to model the complete CHP systems themselves, a more profitable approach is to model individual parts of CHP systems, which can then be used like building blocks to construct a variety of configurations for different types of CHP systems. Object models of each of these different parts can then be created.

Annex Figure 19, Annex Figure 20, and Annex Figure 21 below show three simple thermal facility scheme examples:

- In the first figure, heated water/steam from the heating system is used directly for the electricity generation system.
- In the second and third figures, the return water from the domestic heating system is used to generate electricity. In one case, pre-heating storage may be needed if the return temperature from the additional boiler and building is too cool for the CHP. Alternately, the return temperature from the heating system may be too high for the CHP unit; therefore, the CHP unit may need to cool this returning water first.
- In the third figure, hybrid storage may also be used: instead of using two different tanks, the same tank with two heat exchangers may be used. Hybridizing with electric water heating may also add flexibility to the heating facility.

These examples only show some of the many variations. Many other different CHP system architectures may be implemented.

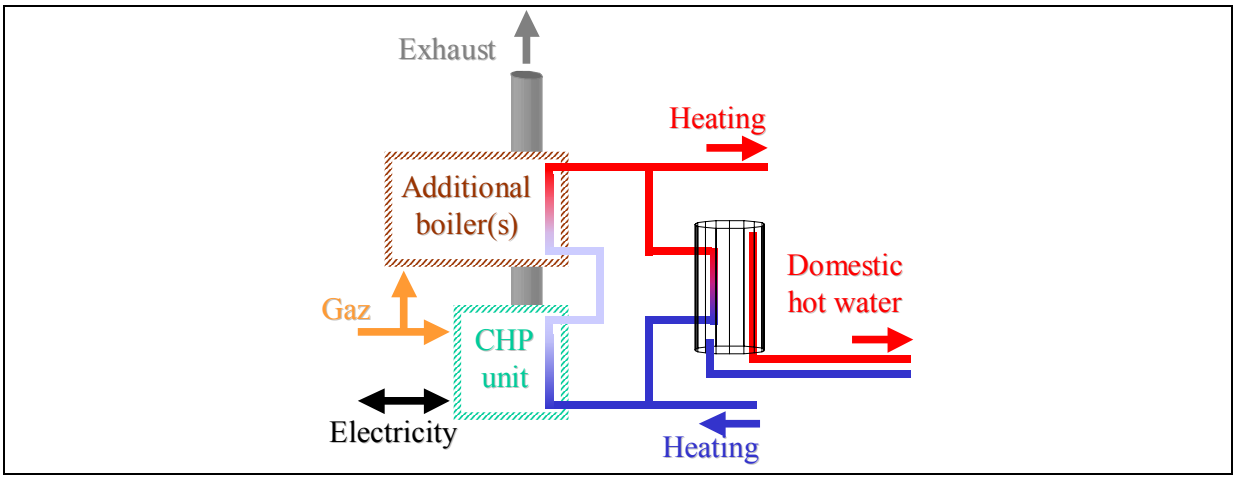

Annex Figure 19: CHP unit includes both domestic hot water and heating loops

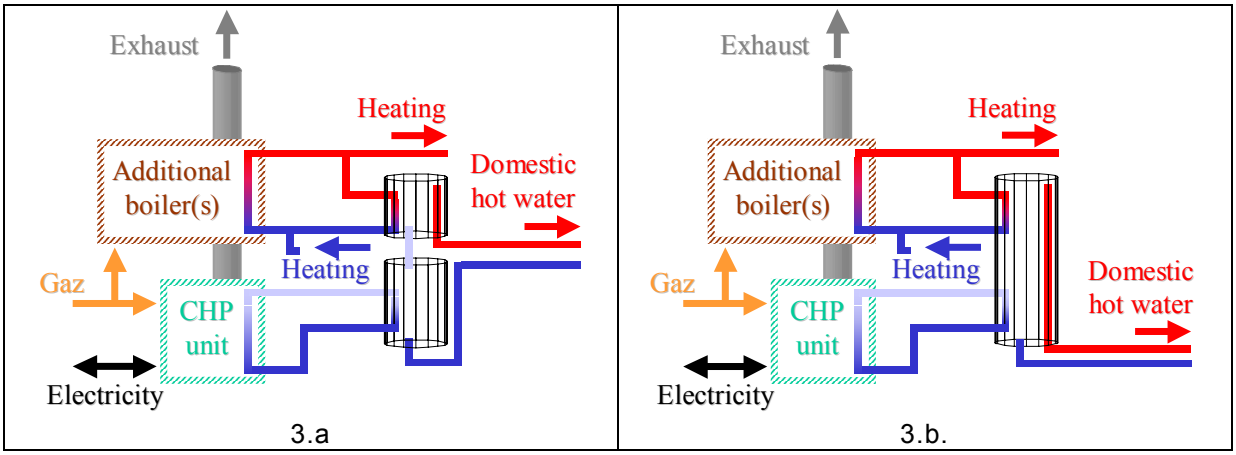

Annex Figure 20: CHP unit includes domestic hot water with hybrid storage

Annex Figure 21: CHP unit includes domestic hot water without hybrid storage

In addition to different configurations, CHP systems rely on different prime movers (e.g. gas turbines, fuel cells, microturbine, and diesel engines). Some of these combinations are in different phases of development (from commercial to prototypes). Therefore, determining which combined technologies will be used over time will be difficult to determine.

These facts lead again to the conclusion that each part of a CHP system should be separately modelled, with these parts put together as needed by the implementers of different CHP systems. For this reason, many different Logical Nodes could be used in a CHP system, most of which are already existing or proposed for other DER systems. The LNs that may be unique to CHP are those which handle the “combined” aspect of CHP, along with the characteristics of the individual parts of the CHP system:

- Combined operations management
- Heat production and boiler systems
- Heat exchange systems
- Chimney and exhaust systems
- Cooling systems

3.5.2 Combined Heat and Power Logical Device

The LNs in this section address the non-generator aspects of the CHP system, since the generator types are addressed independently of their use in a CHP system (see reciprocating engines, steam turbines, gas turbines, microturbines[2], etc.).

Annex Figure 22 illustrates the CHP Logical Nodes.

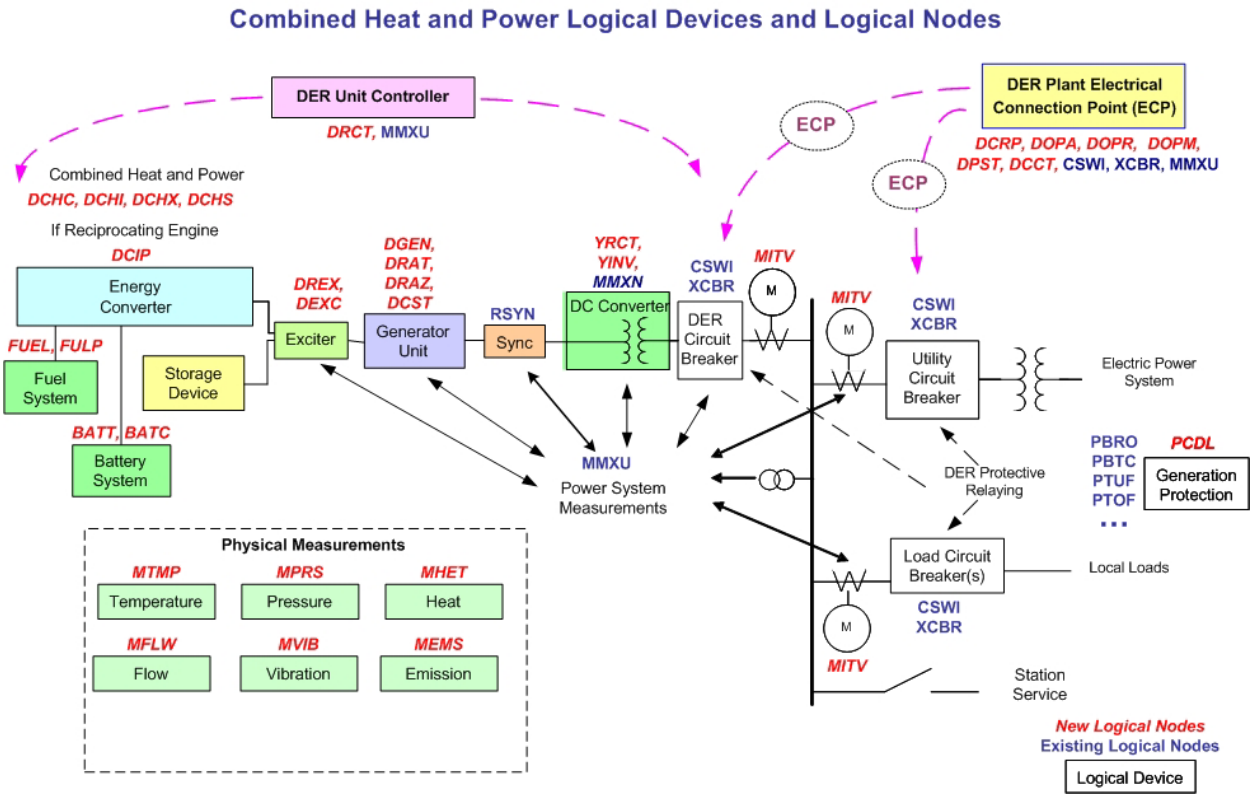

Annex Figure 22: LNs Associated with a Combined Heat and Power (CHP) System

The Logical Devices probably used with a CHP Logical Device include:

- **DER Plant ECP:** electrical connection point of the DER plant to an electric power system, which could be local or interconnected to the power system.
- **DER Unit Controller**: general capabilities of the controller for any type of DER unit
- **DER Generation**: generator characteristics
- **DER Excitation**: exciter characteristics
- **DER *Energy Converter***, such as reciprocating engine, steam turbine, or fuel cell. (The Logical Nodes for a turbine have not been developed yet.)
- **DER Fuel System**: fuel system characteristics, including fuel pumps and costs

The LNs which could be used within a CHP Logical Device include:

[2] IEC 61850 object models for steam turbines, gas turbines, and microturbines have not yet been developed

- **DCHC**: CHP controller of overall CHP system, covering information not contained in the DER unit controller logical device
- **DCHI**: CHP chimney and exhaust
- **DCHX**: CHP heat exchanger
- **DCHP**: CHP heat production
- **DCHC**: CHP coolant system
- **MMXU**: electrical measurements (see IEC 61850-7-4)
- **MITV**: Metering information (see Clause **Error! Reference source not found.**)
- **MTMP**: Temperature characteristics (see Clause **Error! Reference source not found.**)
- **MPRS**: Pressure measurements (see Clause **Error! Reference source not found.**)
- **MHET**: Heat and cooling measurements (see Clause **Error! Reference source not found.**)
- **MFLW**: Flow measurements (see Clause **Error! Reference source not found.**)
- **MVIB**: Vibration measurements (see Clause **Error! Reference source not found.**)
- **MEMS**: Emission measurements (see Clause **Error! Reference source not found.**)

3.6 Auxiliary Logical Devices

3.6.1 Interval Metering Logical Device

3.6.2 Fuel System Logical Device

The fuel system logical device describes the characteristics of the system of fuel for different prime movers. The LNs could include:

- **FUEL**: fuel characteristics
- **FULP**: delivery system for the fuel, including the rail system, pump, and valves

The following table shows the different types of fuel[3]:

Annex Table 1: Fuel types

Type of Energy Source	Energy Source Code	Unit Label	AER (Aggregated) Fuel Code	Energy Source Description
Fossil and Nuclear Fuels				
Coal and Syncoal	BIT	tons	COL	Anthracite Coal and Bituminous Coal
	LIG	tons	COL	Lignite Coal
	SUB	tons	COL	Sub-bituminous Coal
	WC	tons	WOC	Waste/Other Coal (includes anthracite culm, bituminous gob, fine coal, lignite waste, waste coal)
	SC	tons	COL	Coal-based Synfuel, including briquettes, pellets, or extrusions, which are formed by binding materials or processes that recycle materials
	DFO	barrels	DFO	Distillate Fuel Oil (Diesel, No. 1, No. 2, and No. 4 Fuel Oils)

[3] EIA – Energy Information Administration, official energy statistics from the US government

Type of Energy Source	Energy Source Code	Unit Label	AER (Aggregated) Fuel Code	Energy Source Description
Petroleum Products	JF	barrels	WOO	Jet Fuel
	KER	barrels	WOO	Kerosene
	PC	tons	PC	Petroleum Coke
	RFO	barrels	RFO	Residual Fuel Oil (No. 5, No. 6 Fuel Oils, and Bunker C Fuel Oil)
	WO	barrels	WOO	Waste/Other Oil (including Crude Oil, Liquid Butane, Liquid Propane, Oil Waste, Re-Refined Motor Oil, Sludge Oil, Tar Oil, or other petroleum-based liquid wastes)
Natural Gas and Other Gases	NG	Mcf	NG	Natural Gas
	BFG	Mcf	OOG	Blast Furnace Gas
	OG	Mcf	OOG	Other Gas
	PG	Mcf	OOG	Gaseous Propane
Nuclear	NUC	N/A	NUC	Nuclear Fission (Uranium, Plutonium, Thorium)
Renewable Fuels				
Solid Renewable Fuels (Biomass)	AB	tons	ORW	Agricultural Crop Byproducts/Straw/Energy Crops
	MSW	tons	MLG	Municipal Solid Waste
	OBS	tons	ORW	Other Biomass Solids
	TDF	tons	ORW	Tire-derived Fuels
	WDS	tons	WWW	Wood/Wood Waste Solids (paper pellets, railroad ties, utility poles, wood chips, bark, an other wood waste solids)
Liquid Renewable (Biomass) Fuels	OBL	barrels	ORW	Other Biomass Liquids (specify in Comments)
	BLQ	tons	WWW	Black Liquor
	SLW	tons	ORW	Sludge Waste
	WDL	barrels	WWW	Wood Waste Liquids excluding Black Liquor (BLQ) (Includes red liquor, sludge wood, spent sulfite liquor, and other wood-based liquids)
Gaseous Renewable (Biomass) Fuels	LFG	Mcf	MLG	Landfill Gas
	OBG	Mcf	ORW	Other Biomass Gas(includes digester gas, methane, and other biomass gases)
All Other Renewable Fuels	GEO	N/A	GEO	Geothermal
	WAT	N/A	HYC	Water at a Conventional Hydroelectric Turbine
	SUN	N/A	SUN	Solar
	WND	N/A	WND	Wind
All Other Fuels				
	HPS	N/A	HPS	
	PUR	N/A	OTH	Purchased Steam
	WH	N/A	OTH	Waste heat not directly attributed to a fuel source. Note that WH should only be reported where the fuel source for the waste heat is undetermined, and for combined cycle steam turbines that are not supplementary fired
	OTH	N/A	OTH	Other

3.6.3 Battery System Logical Device

The battery system logical device describes the characteristics of batteries. These batteries could be used as backup power, the source of excitation current, or as the prime mover for generating electricity.

The LNs could include:

- **BATT**: battery system characteristics
- **BATC**: charger for the battery system

3.6.4 Physical Measurements

These LNs cover physical measurements, including temperature, pressure, heat, flow, vibration, environmental, and meteorological conditions.

The LNs included are:

- **MTMP**: Temperature measurements
- **MPRS**: Pressure measurements
- **MHET**: Heat measurements
- **MFLW**: Flow measurements
- **MVIB**: Vibration conditions
- **MEMS**: Emission conditions
- **METR**: Meteorological conditions